IO-Link Safety Test & Assessment

Specification

M1.1.5
October 2025

Order No: 10.162

File name: **IO-Link_Safety_Test_10.162_M1.1.5_Oct2025.docx**

This specification has been prepared by the IO-Link Safety test team and released by the IO-Link community. It covers automated SCL tests, functional test cases and change requests since V1.1.4 and requests from an assessment body.

Any comments, proposals, requests on this document are appreciated. Please use www.io-link-projects.com for your entries and provide name and email address.
Login: **IOLSafety-Test11**
Password: **Report**

Publisher:
IO-Link Community
c/o PROFIBUS Nutzerorganisation e.V.
Ohiostrasse 8
76149 Karlsruhe
Germany
Phone: +49 721 / 98 61 97 0
Fax: +49 721 / 98 61 97 11
E-mail: info@io-link.com
Web site: www.io-link.com

LICENSE AGREEMENT

1. License

1.1 Subject of this license agreement is this document issued by the Licensor, in electronic form. If applicable, also software may be provided.

1.2 The user of this document (Licensee) acquires the license solely from PROFIBUS Nutzerorganisation e.V., having its principal place of business in Karlsruhe, Germany (hereinafter referred to as “Licensor”).

1.3 This document is not an industrial standard acknowledged by any standardization body or otherwise and may be further enhanced.

2. Rights and Duties of Licensee

2.1 Licensor hereby grants to Licensee the right to use this document exclusively for developing and supporting products compliant with this document. Licensee may copy this document for this purpose and for data backup purposes.

2.2 Licensee shall not be entitled to modify, decompile, reverse engineer or extract any individual parts of this document, unless this is permitted by mandatory Copyright Law. Furthermore, Licensee shall not be entitled to remove any alphanumeric identifiers, trademarks or copyright notices from this document and, insofar as Licensee is entitled to make copies of this document, Licensee shall copy them without alteration.

2.3 Licensee is not entitled to copy and redistribute this document to any third party, except for “Have Made” purposes. All copies must be obtained on an individual basis, directly from the website www.de.profibus.com or www.profibus.com or upon request from the Licensor.

3. Liability of Licensor

3.1 Licensor shall have no obligation to enhance the document and shall assume no liability in case the document or future versions thereof shall not be approved as an industrial standard.

3.2 Licensor’s liability for defects as to quality or title of this document, especially in relation to the correctness or absence of defects or the absence of claims or third-party rights or in relation to completeness, usability and/or fitness for purpose are excluded, except for cases involving gross negligence, willful misconduct or fraudulent concealment of a defect.

3.3 Any further liability is excluded unless required by law, e.g. in cases of personal injury or death, willful misconduct, gross negligence, or in case of breach of fundamental contractual obligations. The damages in case of breach of fundamental contractual obligations is limited to the contract-typical, foreseeable damage if there is no willful misconduct or gross negligence.

4. Place of Jurisdiction and Applicable Law

4.1 The sole place of jurisdiction shall be the principal place of business of Licensor.

4.2 All relations arising out of the contract shall be governed by the substantive law of Germany, to the exclusion of the United Nations Convention on Contracts for the International Sale of Goods (CISG).

Conventions:

In this specification the following key words (in **bold** text) will be used:

shall:	indicates a mandatory requirement. Designers shall implement such mandatory requirements to ensure interoperability and to claim conformity with this specification.
should:	indicates flexibility of choice with a strongly preferred implementation.
can:	indicates flexibility of choice with no implied preference (possibility and capability).
may:	indicates a permission.
highly recommended:	indicates that a feature shall be implemented except for well-founded cases. Vendor shall document the deviation within the user manual and within the manufacturer declaration.

1 Revision log:

Date	Version	Editor	Description	CRs covered
13-Dec-2021	WDV1.1	WS	Working Draft updated after WG meeting on 09-Dec-2021 (more CRs covered)	
10-Feb-2022	V1.1	WS	Final version updated after WG meeting on 04-Feb-2022 (all CRs covered)	13,31,35,37,38,39,40 Refused: 22,23,
10-Mar-2022	V1.1	WS	Final release after IO-Link SteCo and PNO Advisory Board	
28-Apr-2022	WDV1.1	OW	Change according to Meeting Minutes 25-Mar-2022 (4.1) added. Result of Meeting 2022-04-27. Added NOTE 4 to Table A.206.	41,42,43,44,45,46,47
3-Jun-2022	WDV1.2	OW	Review comments from TUEV considered	50
6-Jun 2022	WDV1.2	OW	OSSDe changes regarding TUEV RP added	53
28-Jun-2022	WDV1.2	OW	After IOL-S-WG-Test Meeting 28.6	52
13-Dec-2022	WDV1.3	OW	New Chapter B	
10-Jan-2023	WDV1.4	OW	Review comments from TUEV Meeting 19.1.23 added	
30-Jan-2023	WDV1.5	OW	2 new Testcases SDCI_FSTC_0198 and SDCI_FSTC_0199 with Devices from regular automation environment added, SDCI_FSTC_0189 rewritten	54,55
8-Mar-2023	dV1.1.3	OW	Description WD-Timeout added, MinCycleTimes for SMTU adjusted, SMTU_Delay_SPDU instruction updated	56,58
4-Apr-2023	WDV1.6	OW	WD-Timeout for TC_0051 rewritten Error Codes for TC_0023, 0024, 0027,0028 corrected.	57,59
10-Jan-204	WDV1.7	OW	Typos / Missing delay in TC_0177 and TC_0179	60,61
17-Mar-2024	WDV1.7	OW	MasterCycleTime > 0x80	62,63
17-Apr-2024	WDV1.7	OW	Chapter B.5.3 / B.5.4 according to TUEV review	65
17-Apr-2024	WDV1.7	OW	Splitter-composer Tests FSTC_181/2 now supporting FSPDInOut	64
28-May-2024	WDV1.7	OW	PORT_MIXFSCOM replaced by PORT_FSCOM, ABPS_MIXEDFSCOM removed	67, 68
28-May-2024	WDV1.7	OW	Tests for PortEvents added, FSTC_201-205	69
28-May-2024	WDV1.7	OW	Test for volatile storage of TechParCRC added, FSTC_200	70
29-May-2024	WDV1.7	OW	Replacement for SDCI_TC_0029 (PLT) added, FSTC_205	71
12-June-2024	WDV1.7	OW	FSTC_150 (DTI backchannel) adjusted to new Annex F in System extensions	72
1-July-2024	dV1.1.4	OW	OSSDe test cases FSTC_0002, FSTC_0003, FSTC_0004, FSTC_0005, FSTC_0008, FSTC_0009, FSTC_0010 for FS-Master removed. (WG decision 2024-07-01	
15-Aug-2024	V1.1.4	OW	FSTC_0201 and FSCT_0202 are extended that both accept any kind of transmission error. Released version – V114	74, 75
11.Nov-2024	V1.1.4	OW	Update of FSTC_0186	73
20.Mar-2025	dV1.1.5	OW	FSTC_0186, FSTC_0161, FSTC_0163	76, 77, 78
20.Mar-2025	dV1.1.5	OW	FSTC_0196, new FSTC_0206	79, 80
28.Mar-2025	dV1.1.5	OW	FSTC: 0186, 0161, 0163, 0196, 0206	76, 77, 78, 79, 80
24.Apr-2025	dV1.1.5	OW	FSTC 195 removed, 163	82, 84

16.May-2025	dV1.1.5	OW	FSTC_162 modified (issue TMG), FSTC_162, 203 OSSDe Testcases removed (FSTC_0006, 7, 13, 143) FSTC_0157 (manual check without OSSDe checking) OSSDe Signal generator description removed A.2.2	85/88, 87,89
8. July-2025	dV1.1.5	OW	ABPS_FSCONFIG_SAFECOM updated. FSTC_200 added to PLT template 5.6.1	90
27. Aug-2025	dV1.1.5	OW	Retrofitting for SDCI_TC_0093 added	92
15. Oct. 2025	dV1.1.5	OW	FSTC_0207 added FSTC_0012 uses now tRWM FSTC_0208 added (PortIdentity) FSTC_0019 clarified FSTC_0032 restriction of OSSDe Devices Refer only to IO-Link Test Specification CRC16 related tests removed Additional test step in FSTC_0166	81 91 94 95 96 100 101 103

2

CONTENTS

0 Introduction

0.1 General

The single-drop digital communication interface (SDCI) technology described in part 9 of the IEC 61131 series focuses on small sensors and actuators in factory automation, which are nowadays using tiny little and cost-effective microcontrollers. With the help of the SDCI technology, the existing limitations of traditional signal connection technologies such as switching 0/24 V, analogue 0 to 10 V, etc. can be turned into a smooth migration to pure digital communication. Classic sensors and actuators are usually connected to a fieldbus system via input/output modules in so-called remote I/O peripherals. The SDCI Master function enables these peripherals to map SDCI Devices onto a fieldbus system or build up direct gateways. Thus, parameter data can be transferred from the PLC level down to the sensor/actuator level and diagnosis data transferred back in turn by means of the SDCI communication. This is a contribution to consistent parameter storage and maintenance support within a distributed automation system. SDCI is compatible to classic signal switching technology according to part 2 of the IEC 61131 series.

The functional safety extensions for SDCI in [3] provide the necessary technology preconditions for Master and Devices to be turned into functional safety FS-Master and FS-Devices if they are developed according to safety standards such as IEC 61508/ISO13849.

This document specifies the test cases and associated test equipment for such FS-Master and FS-Devices. It provides the necessary preconditions for conformity testing to ensure inter-operability and allows manufacturers of FS-Master and FS-Devices to achieve a precondition of an assessment by a safety assessment body.

0.2 Patent declaration

There are no known patents for the technologies specified in this document. However, attention is drawn to the possibility that some of the elements of this document may be the subject of patent rights. The IO-Link Community shall not be held responsible for identifying any or all such patent rights.

The IO-Link Community maintains on-line data bases of patents relevant to their specifications. Users are encouraged to consult the databases for the most up to date information concerning patents.

IO-Link Safety – Test & Assessment

1 Scope

IEC 61131-9 specifies the Single-Drop digital Communication Interface (IO-Link™[1]) technology as a generic interface for connecting sensors and actuators (called Devices) to a Master unit, which may be combined with gateway capabilities to become a fieldbus remote I/O node (see [1]).

The SDCI physical interface is backward compatible with the usual 24 V I/O signalling specified in IEC 61131-2 and allows in addition digital point-to-point communication at transmission rates of 4,8 kbit/s, 38,4 kbit/s and 230,4 kbit/s.

The SDCI technology specifies parameterization, cyclic exchange of process data, and diagnosis as well as parameter Data Storage capabilities. It is also publicly available in [2].

The document "IO-Link Safety System Extensions" (see [3]) provides the necessary extensions to the basic IO-Link interface and system standard for functional safety communication including compatibility to OSSDe based sensors and the necessary configuration management. These extensions modify the architecture and behavior of Masters and thus turn them into FS-Masters. Devices are turned into FS-Devices.

This document specifies the test cases and associated test environments for FS-Master and FS-Devices designed and developed according to [1] or [2], [3]. It provides the necessary preconditions for conformity testing to ensure interoperability and enables manufacturers of FS-Master and FS-Devices to achieve conformity as a precondition of an assessment by a safety assessment body.

This document refers to [8] as the common basis for testing the non-safety-related parts of FS-Master and FS-Device. The common test cases are only referenced in this document. The current status of the Change-Request-Database shall be observed.

The structure of this document is described in clause 4.2.

In cases where conformance tests in accredited Test Centers unveil intentional implementation deviations or unintentional incorrect implementations that may have tremendous commercial effects, the rules in [9] apply.

Conformity with [3] cannot be claimed unless the requirements of this document are met.

2 Normative references

The following documents, in whole or in part, are normatively referenced in this document and are indispensable for its application. For dated references, only the edition cited applies. For undated references, the latest edition of the referenced document (including any amendments) applies.

IEC 60947-5-3, *Low-voltage switchgear and controlgear – Part 5-2: Control circuit devices and switching elements – Proximity switches*

IEC 61000-1-2, *Electromagnetic compatibility (EMC) - Part 1-2: General - Methodology for the achievement of functional safety of electrical and electronic systems including equipment with regard to electromagnetic phenomena*

[1] IO-Link™ is a trade name of the "IO-Link Community". This information is given for the convenience of users of this specification and does not constitute an endorsement by the IO-Link Community of the trade name holder or any of its products. Compliance to this document does not require use of the registered logos for IO-Link™. Use of the registered logos for IO-Link™ requires permission of the "IO-Link Community".

IEC 61000-6-7, *Electromagnetic compatibility (EMC) - Part 6-7: Generic standards - Immunity requirements for equipment intended to perform functions in a safety-related system (functional safety) in industrial locations*

IEC 61131-2, *Programmable controllers – Part 2: Equipment requirements and tests*

IEC 61131-9, *Programmable controllers – Part 9: Single-drop digital communication interface for small sensors and actuators (SDCI)*

IEC 61496-1, *Safety of machinery – Electro-sensitive protective equipment – Part 1: General requirements and tests*

IEC 61508-2:2010, *Functional safety of electrical/electronic/programmable electronic safety-related systems - Part 2: Requirements for electrical/electronic/programmable electronic safety-related systems*

IEC 61508-3:2010, *Functional safety of electrical/electronic/programmable electronic safety-related systems - Part 3: Software requirements*

IEC 61784-3:2016, *Industrial communication networks - Profiles - Part 3: Functional safety fieldbuses - General rules and profile definitions*

IEC 62061, *Safety of machinery – Functional safety of safety-related electrical, electronic and programmable electronic control systems*

IEC 62453, *Field device tool (FDT) interface specification*

ISO 12100:2010*, Safety of machinery – General principles for design – Risk assessment and risk reduction*

ISO 13849-1:2015, *Safety of machinery – Safety-related parts of control systems – Part 1: General principles for design*

ISO 14119:2013, *Safety of machinery – Interlocking devices associated with guards – Principles for design and selection*

3 Terms, definitions, symbols, abbreviated terms and conventions

3.1 Common terms and definitions

For the purposes of this document, the terms and definitions given in IEC 61131-1 and IEC 61131-2, as well as the following apply.

3.1.1
address
part of the M-sequence control to reference data within data categories of a communication channel

3.1.2
application layer
AL
<SDCI>[2] part of the protocol responsible for the transmission of Process Data objects and On-request Data objects

3.1.3
block parameter
consistent parameter access via multiple Indices or Subindices

[2] Angle brackets indicate validity of the definition for the SDCI (IO-Link) technology

3.1.4
checksum
<SDCI> complementary part of the overall data integrity measures in the data link layer in addition to the UART parity bit

3.1.5
CHKPDU
integrity protection data within an ISDU communication channel generated through XOR processing the octets of a request or response

3.1.6
coded switching
SDCI communication, based on the standard binary signal levels of IEC 61131-2

3.1.7
COM1
SDCI communication mode with transmission rate of 4,8 kbit/s

3.1.8
COM2
SDCI communication mode with transmission rate of 38,4 kbit/s

3.1.9
COM3
SDCI communication mode with transmission rate of 230,4 kbit/s

3.1.10
COMx
one out of three possible SDCI communication modes COM1, COM2, or COM3

3.1.11
communication channel
logical connection between Master and Device

Note 1 to entry: Four communication channels are defined: process channel, page and ISDU channel (for parameters), and diagnosis channel.

3.1.12
communication error
unexpected disturbance of the SDCI transmission protocol

3.1.13
cycle time
time to transmit an M-sequence between a Master and its Device including the following idle time

3.1.14
Device
single passive peer to a Master such as a sensor or actuator

Note 1 to entry: Uppercase "Device" is used for SDCI equipment, while lowercase "device" is used in a generic manner.

3.1.15
Direct Parameters
directly (page) addressed parameters transferred acyclically via the page communication channel without acknowledgement

3.1.16
dynamic parameter
part of a Device's parameter set defined by on-board user interfaces such as teach-in buttons or control panels in addition to the static parameters

3.1.17
Event
instance of a change of conditions in a Device

Note 1 to entry: Uppercase "Event" is used for SDCI Events, while lowercase "event" is used in a generic manner.

Note 2 to entry: An Event is indicated via the Event flag within the Device's status cyclic information, then acyclic transfer of Event data (typically diagnosis information) is conveyed through the diagnosis communication channel.

3.1.18
fallback
transition of a port from coded switching to switching signal mode

3.1.19
inspection level
degree of verification for the Device identity

3.1.20
interleave
segmented cyclic data exchange for Process Data with more than 2 octets through subsequent cycles

3.1.21
ISDU
indexed service data unit used for acyclic acknowledged transmission of parameters that can be segmented in a number of M-sequences

3.1.22
M-sequence
sequence of two messages comprising a Master message and its subsequent Device message

3.1.23
M-sequence control
first octet in a Master message indicating the read/write operation, the type of the communication channel, and the address, for example offset or flow control

3.1.24
M-sequence error
unexpected or wrong message content, or no response

3.1.25
M-sequence type
one particular M-sequence format out of a set of specified M-sequence formats

3.1.26
Master
active peer connected through ports to one up to n Devices and which provides an interface to the gateway to the upper-level communication systems or PLCs

Note 1 to entry: Uppercase "Master" is used for SDCI equipment, while lowercase "master" is used in a generic manner.

3.1.27
message
<SDCI> sequence of UART frames transferred either from a Master to its Device or vice versa following the rules of the SDCI protocol

3.1.28
On-request Data
acyclically transmitted data upon request of the Master application consisting of parameters or Event data

3.1.29
physical layer
first layer of the ISO-OSI reference model, which provides the mechanical, electrical, functional and procedural means to activate, maintain, and de-activate physical connections for bit transmission between data-link entities

Note 1 to entry: Physical layer also provides means for wake-up and fallback procedures.

[SOURCE: ISO/IEC 7498-1, 7.7.2, modified – text extracted from subclause, note added]

3.1.30
port
communication medium interface of the Master to one Device

3.1.31
port operating mode
state of a Master's port that can be either INACTIVE, DO, DI, FIXEDMODE, or SCANMODE

3.1.32
Process Data
input or output values from or to a discrete or continuous automation process cyclically transferred with high priority and in a configured schedule automatically after start-up of a Master

3.1.33
Process Data cycle
complete transfer of all Process Data from or to an individual Device that may comprise several cycles in case of segmentation (interleave)

3.1.34
single parameter
independent parameter access via one single Index or Subindex

3.1.35
SIO
port operation mode in accordance with digital input and output defined in IEC 61131-2 that is established after power-up or fallback or unsuccessful communication attempts

3.1.36
static parameter
part of a Device's parameter set to be saved in a Master for the case of replacement without engineering tools

3.1.37
switching signal
binary signal from or to a Device when in SIO mode (as opposed to the "coded switching" SDCI communication)

3.1.38
system management
SM
<SDCI> means to control and coordinate the internal communication layers and the exceptions within the Master and its ports, and within each Device

3.1.39
UART frame
<SDCI> bit sequence starting with a start bit, followed by eight bits carrying a data octet, followed by an even parity bit and ending with one stop bit

3.1.40
wake-up
procedure for causing a Device to change its mode from SIO to SDCI

3.1.41
wake-up request
WURQ
physical layer service used by the Master to initiate wake-up of a Device, and put it in a receive ready state

3.2 IO-Link Safety: Additional terms and definitions

For the purposes of this document, the following additional terms and definitions apply.

3.2.1
error
discrepancy between a computed, observed, or measured value or condition and the true, specified or theoretically correct value or condition

Note 1 to entry: Errors may be due to design mistakes within hardware/software and/or corrupted information due to electromagnetic interference and/or other effects.

Note 2 to entry: Errors do not necessarily result in a *failure* or a *fault*.

SOURCE: [IEC 61508-4:2010], [IEC 61158]

3.2.2
failure
termination of the ability of a functional unit to perform a required function or operation of a functional unit in any way other than as required

Note 1 to entry: The definition in IEC 61508-4 is the same, with additional notes.

Note 2 to entry: Failure may be due to an error (for example, problem with hardware/software design or message disruption)

SOURCE: [IEC 61508-4:2010, modified], [ISO/IEC 2382-14.01.11, modified]

3.2.3
fault
abnormal condition that may cause a reduction in, or loss of, the capability of a functional unit to perform a required function

Note 1 to entry: IEV 191-05-01 defines “fault” as a state characterized by the inability to perform a required function, excluding the inability during preventive maintenance or other planned actions, or due to lack of external resources.

SOURCE: [IEC 61508-4:2010, modified], [ISO/IEC 2382-14.01.10, modified]

3.2.4
FS-Device
single passive peer such as a functional safety sensor or actuator to a Master with functional safety capabilities

3.2.5
FS-Master
active peer with functional safety capabilities connected through ports to one up to n Devices or FS-Devices and which provides an interface to the gateway to the upper-level communication systems (NSR or SR) or controllers with functional safety capabilities

3.2.6
FSP parameter
parameter set for the administration and operation of the IO-Link Safety protocol

3.2.7
FST parameter
parameter set for the safety-related technology of an FS-Device, for example light curtain

3.2.8
Safety PDU
Safety Protocol Data Unit
SPDU
PDU transferred through the safety communication channel

[SOURCE: IEC 61784-3:2021, 3.1.47, modified – Notes have been removed and admitted term has been added.]

3.2.9
SCL Tests

safety-related communication protocol tests based on systematically developed and certified test scripts whereat using protocol state machines, simulation, model checking, and automated testcase generation, which are lock-sealed by signature (e.g. CRC) and which can only be changed through an entire safety reassessment.

Note 1 to entry: Core part of both types of tests for FS-Device and FS-Master are the SCL test scripts in Clause 9 and Clause 12 in this document.

3.2.10
Functional Tests

visual, manual, or automated tests based on test-to-pass, test-to-fail, and test coverage analysis of specified functions such as protocol environment, parameterization, time conditions, and performance aspects, which can be updated according to approved change requests without impacting the SCL tests in test systems.

3.3 Symbols and abbreviated terms

AL	application layer	
BEP	bit error probability	
C/Q	connection for communication (C) or switching (Q) signal (SIO)	
CRC	cyclic redundancy check	
DDO	Device data object	
DI	digital input	
DL	data link layer	
DO	digital output	
DTI	Device Tool Interface	
FDI	Field Device Integration	[IEC 62769]
FDT	Field Device Tool	[IEC 62453]
FS	functional safety	
FSCP	functional safety communication profile (for example IEC 61784-3-x series)	
FSDT	FS-Device tester	
FS-AI	functional safety analog input	
FS-DI	functional safety digital input	
I/O	input / output	
IODD	IO Device Description	
IOPD	IO-Link Parameterization & Diagnostic tool	
IOL-S	IO-Link Safety	
L-	power supply (-)	
L+	power supply (+)	
SMTU	Safety Master Tester Unit	
SDTU	Safety Device Tester Unit	
N24	24 V extra power supply (-); Port class B	

NSR	non-safety-related	
OD	On-request Data	
OK	"OK", values or state correct	
OSSD	output signal switching device (self-testing electronic device with built-in OSSD)	[IEC 61496-1]
OSSDe	output signal switching device (self-testing electronic device with built-in OSSD) according to [3] chapter 5.3.	
OSSD1/2e	pin assigment of both OSSDe signals	[3]
OSSDm	output signal switching device (relay and solid state outputs)	[IEC 60947-5-5]
P24	24 V extra power supply (+); Port class B	
PD	Process Data	
PDin	functional safety input process data (from an FS-Master's view)	
PDout	functional safety output process data (from an FS-Master's view)	
PDCT	port and Device configuration tool	
PFH	(average) probability of a dangerous failure per hour	
PID	program interface description	
PL	physical layer	
PLC	programmable logic controller	
PS	power supply (measured in V)	
RIO	remote I/O	
SCL	safety communication layer	
SDCI	single-drop digital communication interface	[IEC 61131-9]
SIO	standard input output (digital switching mode)	[IEC 61131-2]
SM	system management	
SMTA	safety master tester application	
SDTA	safety device tester application	
SPDU	safety protocol data unit	
SR	safety-related	
SSI	synchronous serial interface (usually for encoders)	
TAF	temporary acknowledgment file	
TBF	temporary backchannel file	
TPF	temporary parameter file	
UART	universal asynchronous receiver transmitter	
UML 2	unified modeling language, edition 2	[ISO/IEC 19505-2]
WURQ	wake-up request pulse	
XML	extensible markup language	

3.4 Conventions

3.4.1 Test case template

This document uses a dedicated template as shown in Table 1 for the particular test cases. It contains explanations on how to use items in the left column.

Table 1 – Test case template

TEST CASE ATTRIBUTES	IDENTIFICATION / REFERENCE
Identification (ID)	SDCI_FSTC_nnnn (nnnn = 4-digit consecutive number starting with 0001)
Name	Characteristic name of the test case (see 0)
Purpose (short)	Short description of the purpose of the test case (one line maximum)
Equipment under test (EUT)	FS- Master, FS- Device, IODD, Dedicated Tool, FS-Master Tool
Test case version	Starts with 1.0. Incremented first number indicates significant changes due to new functionality, the second one indicates changes within the test case
Category / type	See 3.4.3
Specification (clause)	[Bibliography, nn], clause or subclause, figure, table, chart, etc.
Configuration / setup	For example: Reference-FS-Master and EUT (FS-Device)

TEST CASE	CONDITIONS / PERFORMANCE
Purpose (detailed)	Comprehensive description of the purpose of the test case (can be several lines). Shall not contain preconditions or instructions.
Precondition	Initial mode of the test set (both EUT and test environment) to be set prior to testing or ID of previous test. Examples: *Tester precondition/Measurement instrument pre-set* … *EUT precondition* …
Procedure	- Step by step description of the test, each step marked by characters a), b), c), etc. - Loops are possible (see [8]) - "Test step macros" are possible, shall be named "TS_<domain>_xxxx", and defined within the general clause. Examples: a) Test step macro α b) Evaluation 1) c) Single instruction d) Evaluation 2) …
Test parameter	- Shall be specified using definitions within [2] - Can be identified using A), B), C), etc. - Shall be linked to procedure steps, for example a), b), c), etc. - Test loops can be used as specified in 3.3.1.3 in [8]
Post condition	Final mode of the EUT and its test environment. It is possible to keep evaluation results as input for subsequent test cases if a certain test case gets too complex.

TEST CASE RESULTS	CHECK / REACTION
Evaluation	- A sequence of steps, where the status of the EUT is checked at each step - Each evaluation step is linked to a procedure step - Each evaluation step to be marked by a numeric character 1), 2), 3), etc. Example: 1) Parameter β, Parameter γ, … 2) Value λ …
Test passed	Test verdict if defined expectations are fulfilled, such as: - Approve reaction at each evaluation step whether it is correct ("and") - In case of alternate paths are defined, they shall be approved as defined ("or"). - Approve if deviations can be tolerated as exceptions (see [9]).
Test failed (examples)	Describe incorrect reaction and describe the reasons for failing
Report	Create brief data of test results such as measurement values, states, Events, implementation exceptions, test exceptions (see [9]), etc., and if test passed or not passed. Data shall be sufficient for a test certificate (option).

3.4.2 Naming of test cases

Figure 1 shows the structure of the name of a test case.

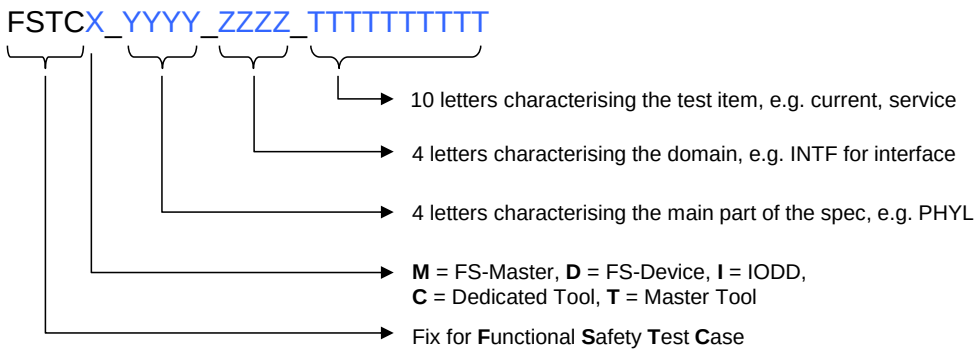

Figure 1 – Structure of the test case name

3.4.3 Categories and types of test cases

Table 2 shows the used test case categories within this document.

Table 2 – Test case categories

Category	Definition
Master Physical Layer test	Measure port voltages, currents, and timings
FS-Master OSSD test	Removed
Device Physical Layer test	Measure Device voltages, currents, and timings
FS-Device OSSD test	Measure specific FS-Device voltages, currents, and timings
Master DL protocol test	Check Master protocol on DL level
FS-Master DL protocol test	Check FS-Master protocol specifics on DL level (e.g. READY pulse)
Device DL protocol test	Check Device protocol on DL level
FS-Device DL protocol test	Check FS-Device protocol specifics on DL level (e.g. READY pulse)
Master/Device protocol test	Master/Device interaction test on DL level
FS-Master/Device protocol. test	FS-Master and FS-Device interaction test on DL level
Device PREOPERATE test	Device protocol test in PREOPERATE mode
FS-Device PREOPERATE test	FS-Device protocol test in PREOPERATE mode
Device OPERATE test	Device protocol test in OPERATE mode
FS-Device OPERATE test	FS-Device protocol test in OPERATE mode
Device ISDU test	Device ISDU protocol test
FS-Device ISDU test	FS-Device ISDU protocol test: FSP and FST parameterization
Device Event test	Test of Device Event handling
Device Direct Parameter test	Test of Device's Direct Parameter page handling
Device application test	Test of Device's application behavior
IODD safety test	Test whether IODD is conforming to IO-Link Safety Extensions spec.
IODD verification test	Test whether IODD and the actual FS-Device parameter are matching
IODD verify test (FSP)	Test whether IODD and the actual FS-Device parameter are matching
IODD verification test	Test whether IODD and the actual FS-Device parameter are matching
Master Data Storage test	Test of Master's Data Storage mechanisms

Table 3 shows the used test case types within this document.

Table 3 – Test case types

Category	Definition
Test-to-pass	Positive test. A function shall perform as specified. Usually, the tests of a domain are beginning with these tests, where no stress is applied.
Test-to-fail	Negative or stress test. A function shall react with a defined behavior, for example an error indication when boundary conditions are exceeded.

3.4.4 Naming of variables

Due to the possible implementation of the test cases in software, all used symbols and abbreviated terms in this document (see 3.3) are written in upper case letters without superscript or subscript.

3.4.5 Memory and transmission octet order

Figure 2 demonstrates the order that shall be used when transferring WORD based data types from memory to transmission and vice versa.

NOTE Existing microcontrollers can differ in the way WORD based data types are stored in memory: "big endian" and "little endian". If designs are not taking into account this fact, octets can be erroneously permuted for transmission.

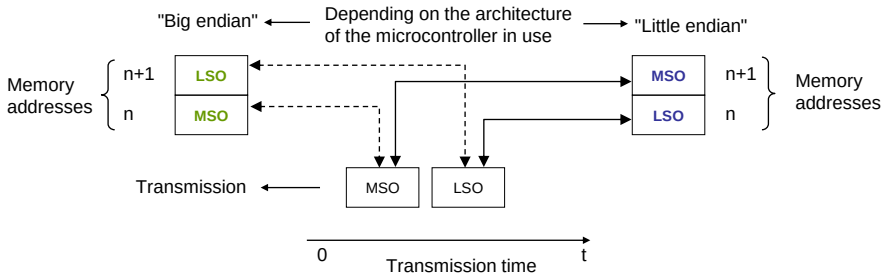

Figure 2 – Memory and transmission octet order

3.4.6 Behavioural descriptions

The notations of UML 2 are used, mainly timing diagrams [6].

4 Strategy for testing IO-Link Safety devices

4.1 Purpose of this test specification

This document specifies the test cases and the necessary test equipment for FS-Master and FS-Devices in conjunction with its parent documents [8] and [3]. It covers OSSDe feature tests as well as functional safety communication protocol tests. It covers also relevant test cases out of [8] via references since both FS-Master and FS-Device are based on IO-Link Technology as "black channel".

The functional safety communication protocol tests are derived from a UML state machine simulation engine and largely automated.

This document provides the necessary information for the development of test instructions for a particular test set in test laboratories.

4.2 Structure of this document

Clause 5 specifies the test cases for the physical layer test of FS-Master and FS-Devices. They mainly require individual manual tests of both signal channels Pin4 with variable power supplies, voltage and current meters as well as oscilloscopes.

Clause 6 specifies the XML schema and business rules tests for IODDs of FS-Devices using XML snippet files and the IO-Link Checker Tool. Additional test cases verify the consistency of the particular IODD and the actual FSP and FST parameters within the associated Device.

Clause 7 specifies additional test cases for FS-Devices verifying the consistency of the particular IODD and the actual FSP and FST parameters within the associated FS-Device and its operational modes.

Clause 8 specifies additional test cases for FS-Devices regarding safety measures such as the VerifyRecord and the protocol watchdog.

Clause 9 contains the automatically generated test cases via UML modelling, model checking and simulation for the safety communication layer (protocol) of the FS-Device.

Clause 10 specifies additional test cases for an FS-Device in a reference FS-Master system.

Clause 11 specifies the FS-Master Port operations test.

Clause 12 contains the automatically generated test cases via UML modelling, model checking and simulation for the safety communication layer (protocol) of the FS-Master.

Clause 13 specifies additional test cases for an FS-Master with reference FS-Devices.

Clause 14 specifies additional test cases for an FS-Master Tool regarding IODD and Dedicated Tool operations.

Clause 15 provides information on required environmental tests and relevant EMC standards as well as special approaches for functional safety.

Annex A describes the test tools, their requirements, and the test configurations. Annex B specifies requirements for safety assessments. Annex C provides information about support for conformance testing. Annex D refers to the Manufacturer Declaration for FS-Master and FS-Device. Annex E provides an index on all test cases in this document. Annexes A, B, and D are safety-related.

4.3 Conformity classes

4.3.1 Overview

All FS-Devices shall support ISDU and thus the rules in Clause 4.3.3 of [8] apply.

4.3.2 FS-Devices with OSSDe

Safety devices with a single stop function such as e-stop buttons, two-hands control, mats, light curtain, etc. are candidates to become an FS-Device with both OSSDe and digital safety communication and thus serving the markets for FS-DI modules in both the classic remote IO's as well as the extended functionality with identification, parameterization, diagnosis, and Data Storage features to participate in modern automation concepts when connected to an FS-Master.

4.3.3 FS-Devices without OSSDe

Safety devices with measurement capabilities such as for temperature, strain, torque, pressure, object types, distance, position, rotation, or multi-sensing, or actuators such as motor starters, drives, and mechatronics containing sensors and actuators such as door locks, grippers, low voltage witch gears are candidates to become an FS-Device without OSSDe.

FS-Devices without OSSDe can benefit from extra 24 V power via class B.

4.3.4 FS-Master

FS-Master shall support all features specified in [3], which are not marked explicitly as optional. All Ports shall provide power supply ≥ 200 mA, at least one Port shall supply 1000 mA.

The test cases in this specification are only defined for one port. The manufacturer shall repeat all test for every FS-port of the FS-Master. It is up to the manufacturer to assure that simultaneous operation of FS-Ports is checked properly and documented accordingly.

4.3.5 FS-Master with FS-DI support

FS-Master can provide FS-DI support to benefit from existing safety devices on the market as long as there are no versions available with SDCI-FS. Implementation of this feature is vendor specific and not covered by this test specification.

4.3.6 FS-Master with Port Class B

An FS-Master with Ports Class B is possible, however without FS-DI support. The rules in Clause 5.4.2 of [2] apply.

4.4 Test of FS-Devices

4.4.1 General

In general, the rules in Clause 5.1 of [8] apply.

4.4.2 Compatibility with non-safety Master (tester) Ports

4.4.2.1 Device properties for the analysis of the test behavior

It may happen that an FS-Device is connected to a Port in the non-safety mode of an FS-Master/Master or a USB-Master. Since some start-up features of the FS-Devices such as ready pulse and OSSDe are "unknown" to a non-safety Master Port, they may impair (test) functionality. It is not possible, to avoid completely all possible conflicts due to the huge number of deployments of Masters in the field and fortunately these cases do not occur very often.

However, this cannot be assumed for Device tester ("USB-Master") in general and therefore the possible conflicts have been analysed with the help of a dummy representing a typical FS-Device and a tester representing a typical Master Port.

Table 4 shows the characteristics of the dummy FS-Device for the analysis.

Table 4 – Features of the dummy FS-Device

Feature	Characteristic/value	Remark
Self-testing time	3 s	–
Ready pulse	Implemented as specified	–
Switching to OSSDe mode	1.1 s after the Ready pulse as specified in [3]	After switching to OSSDe mode, the FS-Device shall not react on any wake-up or other disturbances.
No OSSDe mode	1. FS-Device is awaiting wake-up pulse 2. FS-Device reacts on "fallback" command	1. Regular behavior 2. FS-Device switches to SIO mode

Table 5 shows possible conflicts and references the remedies.

Table 5 – Possible conflicts

Tester (Master) behavior	FS-Device behavior	Remedy
Master Port starts wake-up after starting time of the FS-Device, which includes self-test and other waiting times (total > 4,2 s).	FS-Device switches automatically to OSSDe mode and does not react on wake-up	R1
Master Port does not send the VerifyRecord.	FS-Device sends Event 0xB00A	R2
Test of PDInvalid cannot be performed	FS-Device only provides PDInvalid information if SCL is in SPDU exchange mode	R3
Test of SystemComand "Application Reset"	FS-Device requires more unchanged parameters	R4
Test of other SystemCommands	FS-Device rejects them in armed mode	R5
Test of SIO support flag may fail	FS-Device always reports SIO not supported	R6

Table 6 shows the requirements for retrofitting of Device testers. Those modified testers can be used to perform standard tests according to [8].

Table 6 – Retrofitting of Device testers for IO-Link Safety

Remedy	Requirements	Reference
R1	Device tester shall support the safety start-up: - Port Power Off/On ("Power cycle") - Await Ready pulse - Regular wake-up procedure - VerifyRecord not required	All TestCases requiring "Power cycle"
R2	Event 0xB00A shall be ignored	SDCI_TC_0072 (see Table 9)
R3	Device tester shall send VerifyRecord and start SCL	SDCI_TC_0312, SDCI_TC_0313 (see Table 9)
R4	"AuthenticityRecord" shall be treated in the same manner as "ApplicationSpecificTag" or "FunctionTag"	SDCI_TC_0317, SDCI_TC_0318 (see Table 9)
R5	The Device tester shall support the change to commissioning mode (see Clause G.1 in [3]) and perform the tests subsequently. The Device tester shall ensure the proper parameter set in the FS-Device after the test.	SDCI_TC_0317 (see Table 9)
R6	The Device tester shall check that SIO-support is always set to false regardless of the content of the IODD	SDCI_TC_0093

4.4.3 Physical Layer tests

Figure 3 shows the workflow for physical layer tests.

Table 7 lists the test cases to be performed during step 1. It contains the non-safety test cases in its first part and the safety-specific test cases within its second part.

Table 7 – Physical layer tests

Major feature	Test cases	Remarks
Power and signal levels (C/Q)	See Clause 5.3 in [8]	–
Wake-up detection	See Clause 5.5 in [8]	–
Waveform and timings	See Clause 5.6 in [8]	–
Ready pulse	FSTC_0016 to FSTC_0017	Clause 5.5 in this document

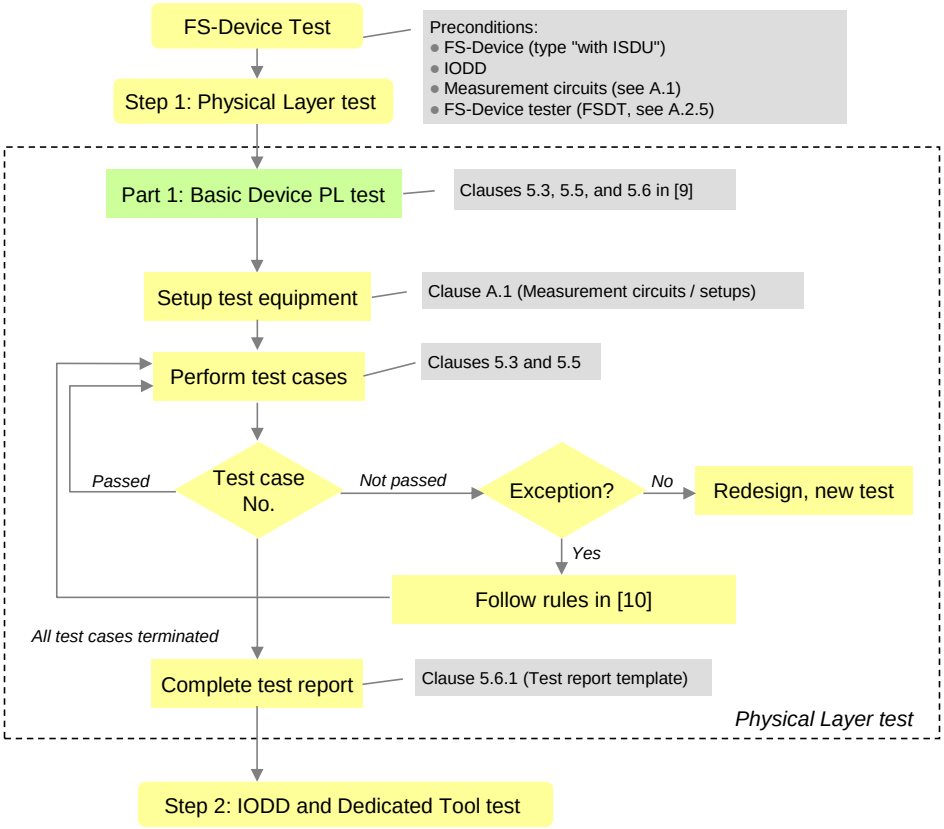

Figure 3 – Step 1 of the FS-Device test sequence (PL)

4.4.4 IODD and Dedicated Tool tests

The rules in Clause 7.1 of [8] apply. Figure 4 shows the workflow for IODD and Dedicated Tool tests of the FS-Device. Basic IODD tests are specified in [4].

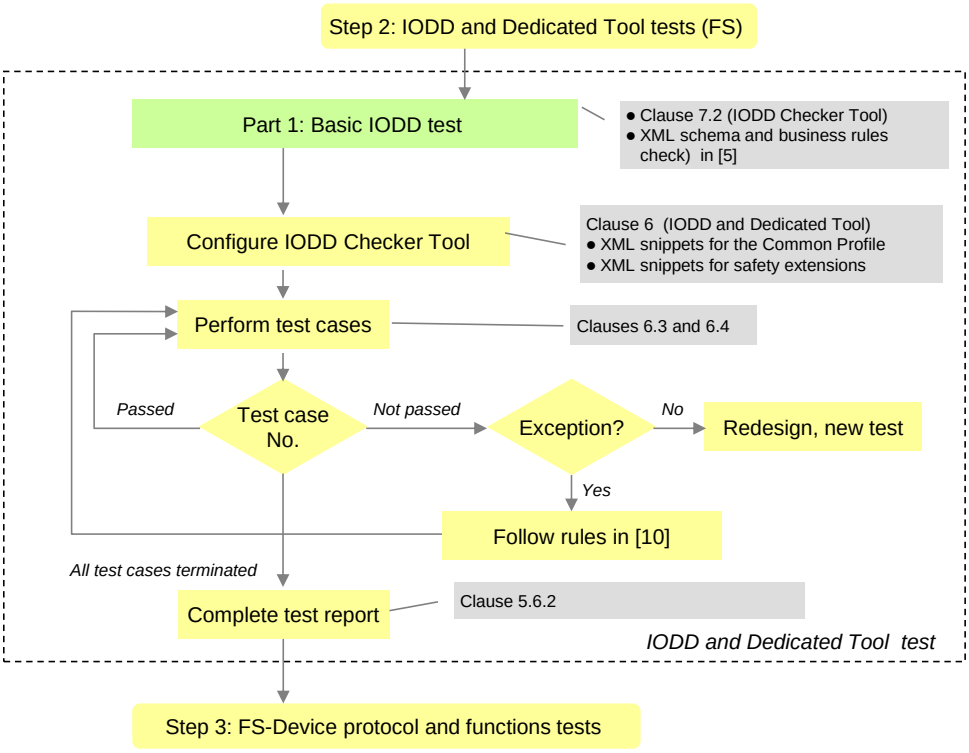

Figure 4 – Step 2 of the FS-Device test sequence (IODD + Dedicated Tool)

Table 8 lists the test cases to be performed during step 2. It contains the test cases for the non-safety parameters within the first part and the safety-specific within the second part.

Table 8 – IODD and Dedicated Tool of FS-Device

Major feature	Test cases	Remarks
Basic IODD schema and business rules	See [4]	–
IODD (FS) + CRC	FSTC_0018	Clause 6.3 in this document
Dedicated Tool	FSTC_0019	Clause 6.4 in this document

4.4.5 FS-Device protocol and functions tests

Figure 5 shows the workflow for protocol and functions testing. Tests are restricted to FS-Devices with ISDU and Data Storage according to [2].

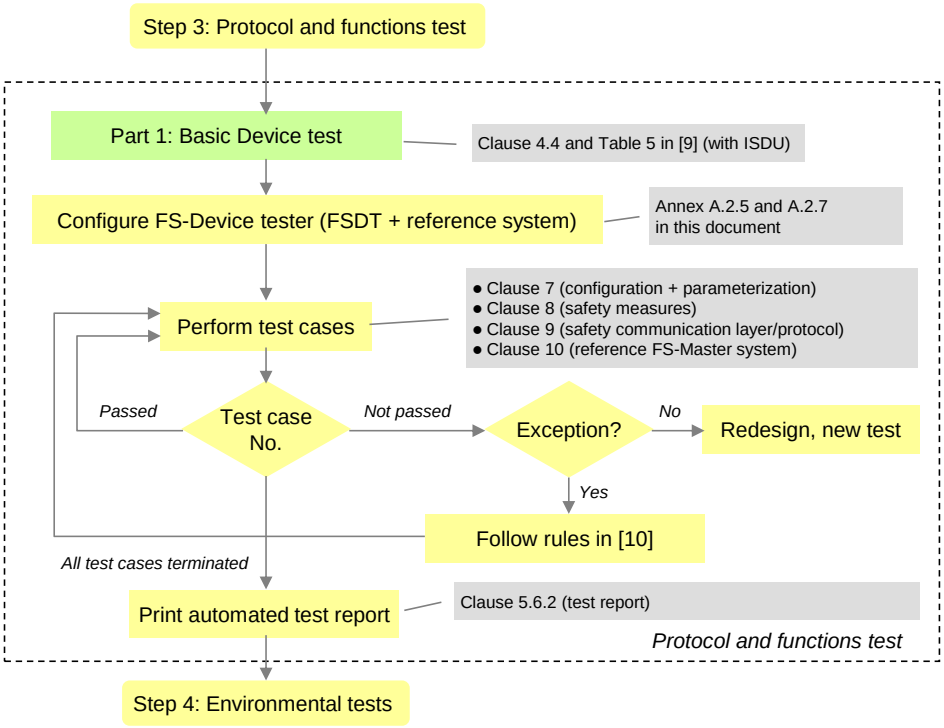

Figure 5 – Step 3 of the FS-Device test sequence (protocol + functions)

Table 9 lists the test cases to be performed during step 3. It contains the test cases for the "black channel" operations of an FS-Device within the first part and the safety-specific within the second part.

Table 9 – Set of protocol test cases for FS-Devices

Major feature	Test cases	Remarks
STARTUP	See 6.2 in [9]	–
PREOPERATE	See 6.3 in [9]	–
OPERATE	See 6.4 in [9]	For SDCI_TC_0312 and SDCI_TC_0313 see Table 6
ISDU	See 6.5 in [9]	–
Events	See 6.6 in [9]	For SDCI_TC_0072 see Table 6
Data Storage	See 6.7 in [9]	–
Direct Parameter page 1	See 6.9 in [9]	–

Major feature	Test cases	Remarks
Predefined parameters	See 6.10 in [9]	–
Block parameter	See 6.11 in [9]	–
IODD based parameter verification	See 7.3 in [9]	–
IODD based functional system tests	See 7.4 in [9]	For SDCI_TC_0317 and SDCI_TC_0318 see Table 6
Configuration + parameterization	FSTC_0020 to _0034	Clause 7 in this document
Safety measures	FSTC_0035 to _0051	Clause 8 in this document
Safety protocol (SCL)	FSTC_0052 to _0147	Clause 9 in this document
Dedicated Tool, replacement, Events	FSTC_0148 to _0154	Clause 10 in this document

4.4.6 Environment

Figure 6 shows step 4 of the FS-Device test. It contains references to the relevant clauses in this specification and consists of EMC tests according to generic or product-specific standards specified in 15.2. A successfully terminated FS-Device test can be completed by a manufacturer declaration as defined in Annex D.

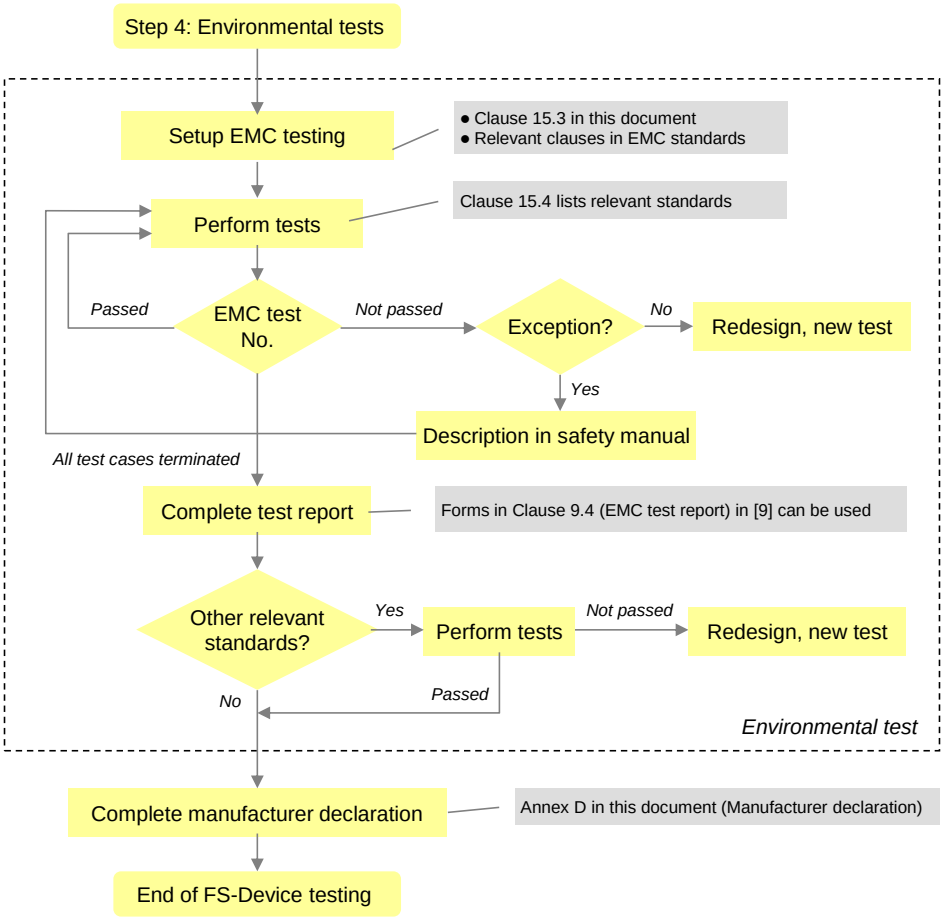

Figure 6 – Step 4 of the FS-Device test sequence (EMC)

4.5 Test of FS-Masters

4.5.1 General

The test of FS-Masters consists of four steps: Physical layer test, Port operations and protocol test, FS-Master Tool test, and environmental test. The requirements for FS-Master-Tester are specified in A.2.3 and A.4.

4.5.2 Physical Layer tests

Figure 7 illustrates step 1 of the FS-Master test sequence. It contains references to the relevant clauses in [8] and in this specification and consists of a visual check and manually performed measurements.

If the FS-Master shows specific connectors, cables, or colour codings, these deviations shall be documented within the user manual with respect to the original definitions in [2] and [3].

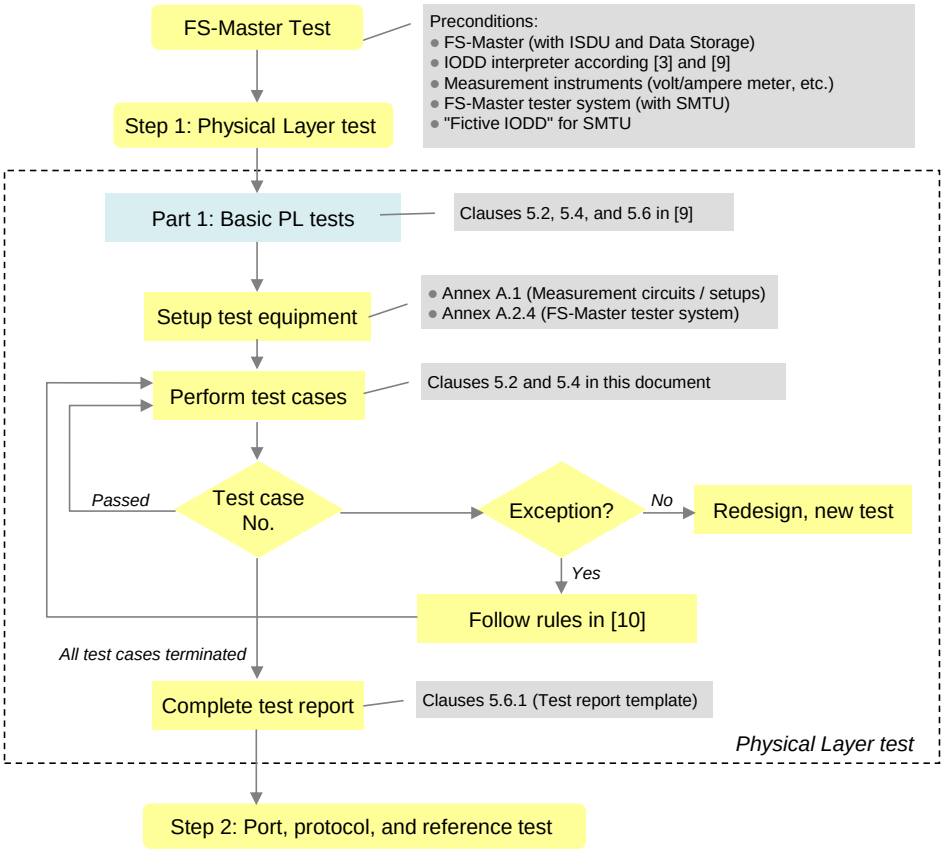

Figure 7 – Step 1 of the FS-Master test sequence (PL)

Table 10 lists the test cases to be performed during step 1. It contains the non-safety test cases in its first part and the safety-specific test cases within its second part.

Table 10 – Physical layer tests

Major feature	Test cases	Remarks
Power and signal levels	Clause 5.2 in [8]	–
Wake-up detection	Clause 5.4 in [8]	–
Waveform and timings	Clause 5.6 in [8]	–
Port Power OFF/ON and Signal on I/Q	FSTC_0001 to _0005	See 5.2 in this document
Discrepancy, test pulse resilience and Ready	FSTC_0008 to _0012	See 5.4 in this document

4.5.3 Port operations, protocol, and reference tests

Figure 8 illustrates step 2 of the FS-Master test.

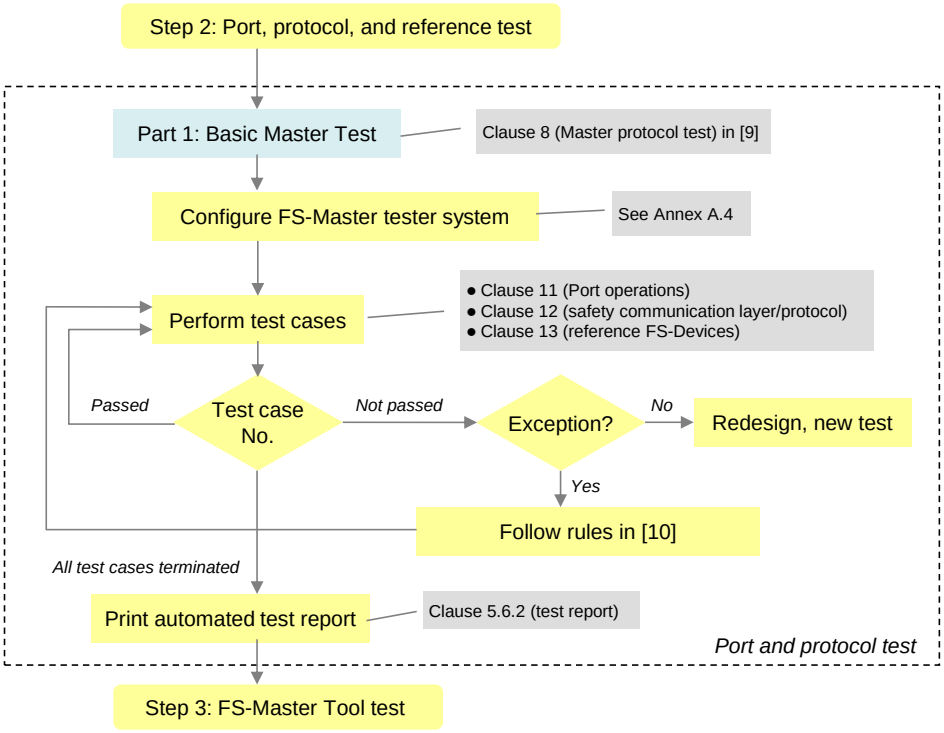

Figure 8 – Step 2 of the FS-Master test sequence (Protocol)

Table 11 lists the FS-Master Port operations and protocol tests. It contains the non-safety test cases in its first part and the safety-specific test cases within its second part.

Table 11 – FS-Master protocol tests

Major feature	Test cases	Remarks
Timings	Clause 8.2 in [8]	–
Process Data (PD)	Clause 8.3 in [8]	–
On-request Data (OD)	Clause 8.4 in [8]	–
STARTUP	Clause 8.5 in [8]	–
PREOPERATE	Clause 8.6 in [8]	–
OPERATE	Clause 8.7 in [8]	–
Fallback	Clause 8.8 in [8]	–
Retry	Clause 8.9 in [8]	–
ISDU (application errors)	Clause 8.10 in [8]	–
ISDU (derived errors)	Clause 8.11 in [8]	–
ISDU (limit checks)	Clause 8.12 in [8]	–
Events	Clause 8.13 in [8]	–
Data Storage	Clause 8.14 in [8]	–
Port operations	FSTC_0155 to _0163 FSTC_0196 to _0197	See 11 in this document
Safety protocol (SCL)	FSTC_0164 to _0176	See 12 in this document
Reference FS-Devices	FSTC_0177 to _0189	See 13 in this document

4.5.4 FS-Master Tool

Figure 9 illustrates step 3 of the FS-Master test. It contains references to the relevant clauses in [8] and in this specification and consists of tests regarding importability (CRC signature check) and display conventions (yellow colour), as well as parameter access via DTI and DDO exchange.

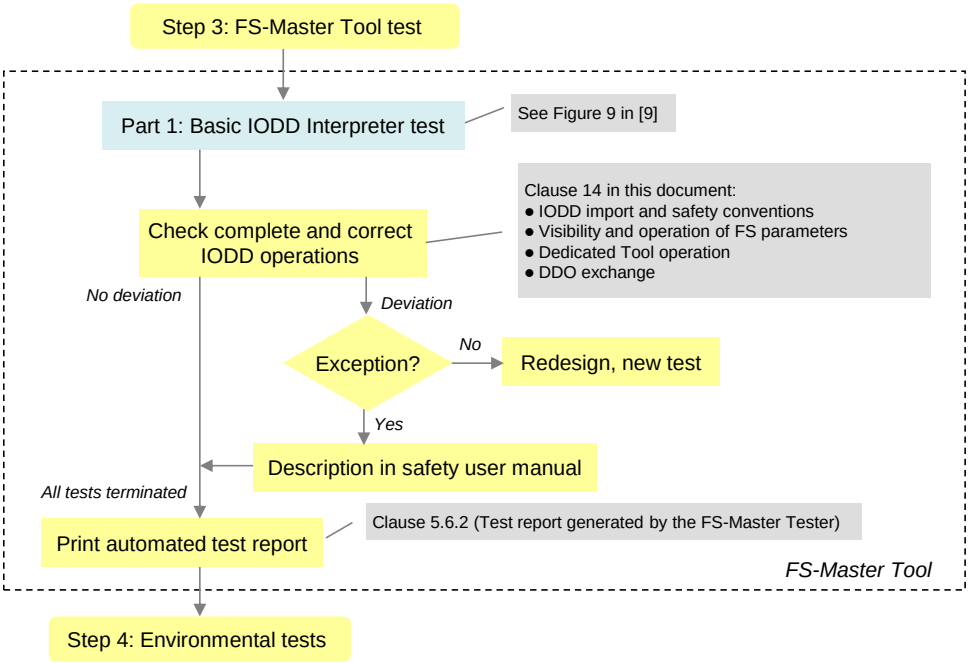

Figure 9 – Step 3 of the FS-Master test sequence (FS-Master Tool)

4.5.5 Environment

Figure 10 illustrates step 4 of the FS-Master test. It contains references to the relevant clauses in this specification and consists of EMC tests according to generic or product-specific standards specified in 15.2. A successfully terminated FS-Master test can be completed by a manufacturer declaration as defined in Annex D.

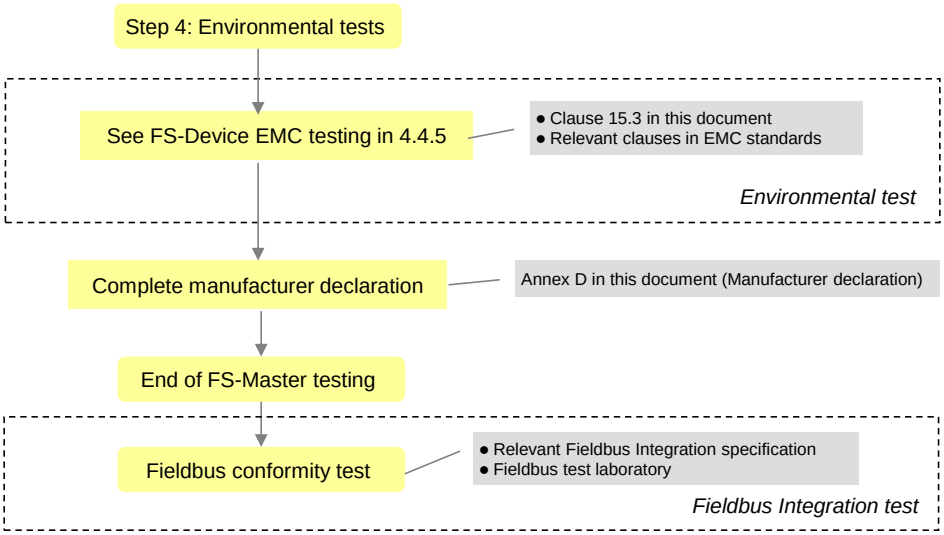

Figure 10 – Step 4 of the FS-Master test (EMC)

5 Physical Layer (PL) tests

5.1 General

The approach, nature and coverage of the FS-Device and FS-Master physical layer tests are described in 4.4.3 and 4.5.2. Figure 3 and Figure 7 illustrate the entire test procedure including the safety part.

The tests of static characteristics of FS-Master Ports comprise Power OFF/ON. The tests of dynamic characteristics of FS-Master Ports comprise Ready pulse and Wake-up delay.

The tests of dynamic characteristics of FS-Devices comprise Ready pulse duration, and delay to OSSDe operation.

5.2 Static characteristics of the FS-Master interface (FS-DI)

5.2.1 Power1 switchable OFF/ON

Table 12 defines the test conditions for this test case.

Table 12 – Power1 switchable OFF/ON

TEST CASE ATTRIBUTES	IDENTIFICATION / REFERENCE
Identification (ID)	SDCI_FSTC_0001
Name	FSTCM_PHYL_PWR1_SWITCHABLE
Purpose (short)	Power1 on any port can be switched OFF and ON
Equipment under test (EUT)	FS-Master
Test case version	1.0
Category / type	FS-Master Physical Layer test, test-to-pass
Specification (clause)	[3] 4.1.4, 5.9
Configuration / setup	Variable Master input voltage PSM and variable current sink according to Figure A.1

TEST CASE	CONDITIONS / PERFORMANCE
Purpose (detailed)	Measure voltage VSM at different loads while Power1 = OFF/ON
Precondition	Test setup: Current sink between L+ and L-, voltmeter in parallel. EUT: PORT_DI (see A.4.2 in [8])
Procedure	a) Identify current capability of tested port (1000 mA or 200 mA) and memorize as ISMmax value *;see field "Test parameter"* b) Select first PSM and ISM value *;see field "Test parameter"* c) Apply PSM value to Master *;see field "Test parameter"* d) Adjust current sink to ISM value *;see field "Test parameter"* e) Turn On Power1 f) Measure VSM in ON state g) Evaluation 1) h) Wait for 1 s i) Turn Off Power1 j) Measure VSM in OFF state k) Evaluation 2) l) Repeat from d) with next ISM value m) Repeat from c) with next PSM value.
Test parameter	PSM = {PSMmin, PSMmax} *;according to user manual* ISM = {ISMmax, 0 mA} *;ISMmax according to user manual*
Post condition	–

TEST CASE RESULTS	CHECK / REACTION
Evaluation	1) Determine maximum VSM (ON state) compared with value of previous loop 2) Determine minimum VSM (OFF state) compared with value of previous loop
Test passed	Maximum value of VSM ≤ 1 V in OFF state, and *;1 V is reasonable practical value* Minimum value of VSM ≥ 20 V in ON state
Test failed	Maximum value of VSM > 1 V in OFF state, or *;1 V is reasonable practical value* Minimum value of VSM < 20 V in ON state
Report	Maximum VSM (ON state): <value> <ok | nok> Minimum VSM (OFF state): <value> <ok | nok>

5.3 Static characteristics of the FS-Device interface

5.3.1 General

Power consumption of an FS-Device is already tested via NSR tests according to [8]. Warnings in case of current limits > 200 mA are checked via user manual in 7.2.3.

5.4 Dynamic characteristics of the FS-Master interface

5.4.1 READY pulse detection

Table 13 defines the test conditions for this test case.

Table 13 – Ready pulse detection

TEST CASE ATTRIBUTES	IDENTIFICATION / REFERENCE
Identification (ID)	SDCI_FSTC_0011
Name	FSTCM_PHYL_INTF_READYDETECT
Purpose (short)	Behavior of Port on READY pulse; limits of detection
Equipment under test (EUT)	FS-Master
Test case version	1.0
Category / type	FS-Master Physical Layer test, test-to-pass
Specification (clause)	[3] 5.3.3, Figure 19; 5.4, Table 6; 5.7, Figure 23
Configuration / setup	FS-Master Tester system
TEST CASE	**CONDITIONS / PERFORMANCE**
Purpose (detailed)	FS-Master Port behavior upon variable time-to-Ready-pulse t2R and Ready pulse duration tRP
Precondition	SMTU: SMTU_STANDARD_STATE_32 EUT: PORT_FSCOM
Procedure	a) Choose first values of t2R and tRP *;Test parameter* b) Perform SMTU_Ready_Wait (t2R, tRP) *;see A.4.7* c) Power ON cycle of FS-Device d) TM_AWAIT (t2R) *;before and beyond Ready pulse* e) Read SR Process Data via SMI_FSPDInOut service *;returns ArgBlock "FSPDInOut"* f) Evaluation 1) g) Repeat from b) with next t2R h) Repeat from b) with next tRP
Test parameter	t2R = {5 s, (5+1) s}, ;optional: value from IODD instead of default = 5 s tRP = {0,5 ms, 1 ms}
Post condition	–
TEST CASE RESULTS	**CHECK / REACTION**
Evaluation	1) Check ArgBlock "FSPDInOut.SPDUIn0"
Test passed	Safety communication started, and *;t2R = 5 s* Safety communication did not start (timeout) *;t2R = (5+1) s*
Test failed (examples)	Safety communication did not start, and/or *;t2R = 5 s* Safety communication started *;t2R = (5+1) s*
Report	Safety communication: <yes/no> <ok | nok>

5.4.2 Wake-up delay after Ready pulse

Table 13 defines the test conditions for this test case

Table 14 – Wake-up delay after Ready pulse

TEST CASE ATTRIBUTES	IDENTIFICATION / REFERENCE
Identification (ID)	SDCI_FSTC_0012
Name	FSTCM_PHYL_INTF_WAKEUPTOREADYDELAY
Purpose (short)	After Ready pulse, FS-Master waits tRW before Wake-up
Equipment under test (EUT)	FS-Master
Test case version	1.1
Category / type	FS-Master Physical Layer test, test-to-pass
Specification (clause)	[3] 5.3.3, Figure 21; 5.4, Table 7; 5.7, Figure 27
Configuration / setup	FS-Master Tester system
TEST CASE	**CONDITIONS / PERFORMANCE**
Purpose (detailed)	After Ready pulse, FS-Master waits a time tRWM before Wake-up sequence
Precondition	SMTU: SMTU_STANDARD_STATE_32 EUT: PORT_FSCOM
Procedure	a) Choose first value of tRP *;Test parameter* b) Perform SMTU_Ready_Wait(2 s, tRP) *;see A.4.7* c) Power ON cycle of "FS-Device" d) Measure time tRWM from falling edge of READY-pulse to rising edge of WURQ e) Repeat from b) with next tRP
Test parameter	tRP = {0,5 ms, 1 ms}
Post condition	–
TEST CASE RESULTS	**CHECK / REACTION**
Evaluation	1) Check measurement value
Test passed	tRWM ≥ 50 µs
Test failed (examples)	tRWM < 50 µs
Report	tRWM ≥ 50 µs: <yes/no> <ok | nok>

5.5 Dynamic characteristics of the FS-Device interface

Ready pulse duration

Table 15 defines the test conditions for this test case.

Table 15 – Ready pulse duration

TEST CASE ATTRIBUTES	IDENTIFICATION / REFERENCE
Identification (ID)	SDCI_FSTC_0016
Name	FSTCD_PHYL_INTF_READYPULSDUR
Purpose (short)	FS-Device's Ready pulse duration
Equipment under test (EUT)	FS-Device
Test case version	1.0
Category / type	FS-Device Physical Layer test, test-to-pass
Specification (clause)	[3] 5.3.3, Figure 21; 5.4, Table 6; 5.7, Figure 23
Configuration / setup	Measurement circuit of Figure A.4

TEST CASE	CONDITIONS / PERFORMANCE
Purpose (detailed)	Measurement of an FS-Device's Ready pulse duration and conformity check
Precondition	EUT: Power off
Procedure	a) Apply first PSD value *;Test parameter* b) Measure time tRP between rising and falling edge of Ready pulse on OSSDe1 c) Evaluation 1) d) Repeat from b) with next PSD value
Test parameter	PSD = {18 V, 30 V}
Post condition	–

TEST CASE RESULTS	CHECK / REACTION
Evaluation	1) Check and memorize tRP @ PSD = 18 V and 30 V
Test passed	For both supply voltages: 500 µs ≤ tRP ≤ 1000 µs
Test failed (examples)	Any of the values of tRP < 500 µs or > 1000 µs
Report	tRP @ 18V: <value> <ok | nok> tRP @ 30V: <value> <ok | nok>

5.5.1 End of Ready pulse to OSSD

Table 16 defines the test conditions for this test case.

Table 16 – End of Ready pulse to OSSD

TEST CASE ATTRIBUTES	IDENTIFICATION / REFERENCE
Identification (ID)	SDCI_FSTC_0017
Name	FSTCD_PHYL_INTF_READY2OSSD
Purpose (short)	FS-Device's end of Ready pulse to OSSDe operation
Equipment under test (EUT)	FS-Device with OSSDe capability
Test case version	1.0
Category / type	FS-Device Physical Layer test, test-to-pass
Specification (clause)	[3] clause 5.3.3, Figure 21; clause 5.4, Table 6; clause 5.7, Figure 23
Configuration / setup	Measurement circuit of Figure A.4

TEST CASE	CONDITIONS / PERFORMANCE
Purpose (detailed)	Measurement of an FS-Device's end of READY pulse to OSSDe operation time and conformity check
Precondition	EUT: Power OFF (preset to ON state)
Procedure	a) Prepare FS-Device for outputs "high" immediately after OSSDe start b) Apply PSD = 24 V to EUT c) Wait until end of Ready pulse d) Measure time t1 e) Wait until OSSDe1 or OSSDe2 change to ON state ("high") f) Measure time t2 g) Evaluation 1)
Test parameter	–
Post condition	–

TEST CASE RESULTS	CHECK / REACTION
Evaluation	1) Determine tRO = t2 – t1
Test passed	tRO ≥ 1,1 s
Test failed (examples)	tRO < 1,1 s
Report	tRO: <value> <ok | nok>

5.5.2 Ready Pulse timeliness

Table 18 defines the test conditions for this test case.

Table 17 – Ready Pulse Timeliness

TEST CASE ATTRIBUTES	IDENTIFICATION / REFERENCE
Identification (ID)	SDCI_FSTC_0200
Name	FSTCD_PHYL_INTF_READYNESS
Purpose (short)	FS-Device's Ready Pulse generation and subsequent wake-up
Equipment under test (EUT)	FS-Device
Test case version	1.0
Category / type	FS-Device Physical Layer test, test-to-pass
Specification (clause)	[3] clause 5.7, Figure 23; clause 5.4, Table 6
Configuration / setup	Measurement circuit of Figure A.4

TEST CASE	CONDITIONS / PERFORMANCE
Purpose (detailed)	Measurement of correct timing of an FS-Device's ready pulse and correct timing of subsequent wake up pulse. Replacement for SDCI_TC_0029 in [8] for FS-Devices.
Precondition	EUT: Power OFF (preset to ON state)
Procedure	a) Apply PSD = 24 V to EUT b) Measure time t1 ; time when L+ > 18V c) Wait for rising edge of C/Q line d) Measure time t2 ; time when ready pulse starts e) Evaluation 1)
Test parameter	–
Post condition	–

TEST CASE RESULTS	CHECK / REACTION
Evaluation	1) Determine t2R = t2 – t1
Test passed	1) t2R < FSP_TimeToReady from IODD
Test failed (examples)	1) t2R > FSP_TimeToReady from IODD
Report	t2R: <value> <ok | nok>

5.6 Test report templates

5.6.1 Template for the test report of PL tests

Table 18 shows the template for the test reports of PL tests.

Table 18 – Template for the test report of PL tests

Test Case ID	Test report	ok/ nok	Statement/ Exception
SDCI_FSTC_0001	Maximum VSM (ON state): <value> Minimum VSM (OFF state): <value>		
SDCI_FSTC_0011	Safety communication: <yes/no>		
SDCI_FSTC_0012	tRW ≥ 50 µs: <yes/no>		
SDCI_FSTC_0016	tRP @ 18V: <value> tRP @ 30V: <value>		
SDCI_FSTC_0017	tRO: <value>		
SDCI_FSTC_0200	t2R: <value>		

5.6.2 Test report summaries of automated test cases

Templates are defined by the particular tester equipment. The complete test reports shall present at least the information of the report fields of the test cases.

6 IODD and Dedicated Tool tests

6.1 Overview

Any FS-Device comes with an IODD including FSP parameters for functional safe communication and usually FST parameters for the possibility of adjusting the particular technology (e.g. optical sensor) to user automation applications and optionally a Dedicated Tool.

Tests of an IODD shall be performed using the IODD Checker Tool, which can be downloaded from the website indicated in Annex C. The extra requirements for the IODD Checker Tool due to the safety extensions are specified in 6.2. These requirements include XML-Snippets for the Common Profile and for IO-Link Safety. XML-Snippets support the presentation of user interfaces and the automated IODD testing.

IODD test cases are specified in 6.3.

For FS-Devices without parameters for their individual technology (so-called FST parameter) no other tool is required besides the IODD. FS-Devices with FST parameter also come with a Dedicated Tool at least for the calculation of the TechParCRC value to be transferred into the FSP_TechParCRC field of the FS-Master Tool.

Dedicated Tool test cases are specified in 10.2.

6.2 Requirements for the IODD Checker (expanded schema test for safety)

6.2.1 Basic requirements and business rules for FS-Devices

Basically, the requirements defined in [4] apply. Additional business rules for IODDs of FS-Devices to be checked are defined in 6.3.

6.2.2 XML snippets for the Common Profile

The XML snippets for the Common Profile are contained in its .zip file downloadable from the website indicated in Annex C. The name of the corresponding draft XML file is *IODD-CommonProfile_Snippets_V1.1.0.xml*.

6.2.3 XML snippets for safety extensions

The XML snippets for safety extensions are specified in [3] and contained in an extra file named *IODD-SafetyProfile_Snippets1.1.3.xml*. Both can be downloaded in a .zip file from the website indicated in Annex C.

6.3 IODD test via Checker Tool (conformity and CRC signatures)

Table 19 defines the test conditions for this test case.

Table 19 – IODD test via Checker Tool (conformity and CRC signatures)

TEST CASE ATTRIBUTES	IDENTIFICATION / REFERENCE
Identification (ID)	SDCI_FSTC_0018
Name	FSTCI_IODD_FSPD_IODDPARAMDESCCRC
Purpose (short)	Conformity of IODD of FS-Device and correct CRC signatures
Equipment under test (EUT)	IODD of FS-Device
Test case version	1.0
Category / type	IODD verify test
Specification (clause)	[3] clause A.1, E.5.6; [5]
Configuration / setup	IODD Checker Tool + XML snippets

TEST CASE	CONDITIONS / PERFORMANCE
Purpose (detailed)	Check conformity of IODD of FS-Device with the help of the Checker Tool downloadable from the official IO-Link website. Base checks are supplemented by extensions from Common Profile specification and IO-Link Safety specification (XML snippets). CRC signature across the entire IODD is checked as well as the CRC signature "FSP_ParamDescCRC". The IODD Checker Tool provides correct CRC signature values if found values have been identified as incorrect.
Precondition	Up to date IODD Checker Tool downloaded from the Internet and XML snippet files
Procedure	a) Perform conformance testing with the help of standard IODD Checker Tool using IODD XML schema based on IODD specification V1.1.3 b) Evaluation 1) c) Perform test on Common Profile parameters using the file "*IODD-CommonProfile_Snippets_V1.1.0.xml*" d) Evaluation 2) e) Perform test on Safety parameters using the file "*IODD-SafetyProfile-Snippets1.1.3.xml*" f) Evaluation 3) g) Perform test on Protocol Mode "Input/Output length" using Process Data Collection (see [4]) h) Evaluation 4) i) Replace CRC signature value of FSP_ParamDescCRC in IODD with suggested value of the Tool if value was incorrect j) Perform IODD check again k) Evaluation 5)
Test parameter	–
Post condition	Value of FSP_ParamDescCRC

TEST CASE RESULTS	CHECK / REACTION
Evaluation	1) Check Tool report 2) Check report on Common Profile parameters 3) Check report on Safety parameters 4) Check report on Protocol Mode 5) Check Tool report and value of "FSP_ParamDescCRC"
Test passed	All reports OK and value correct
Test failed (examples)	Any report NOK and/or value incorrect
Report	IODD with correct "FSP_ParamDescCRC" parameter: <yes/no> <ok | nok>

6.4 Availability of the Dedicated Tool

Table 20 defines the test conditions for this test case.

Table 20 – Availability of the Dedicated Tool

TEST CASE ATTRIBUTES	IDENTIFICATION / REFERENCE
Identification (ID)	SDCI_FSTC_0019
Name	FSTCI_IODD_FSPD_DEDICTOOL
Purpose (short)	Availability of Dedicated Tool or adequate means for TechParCRC determination
Equipment under test (EUT)	FS-Device with FST parameter
Test case version	1.0
Category / type	IODD verify test: Dedicated Tool
Specification (clause)	[3] clause A.1, E.5.6
Configuration / setup	IODD Finder, user manual, manual check

TEST CASE	CONDITIONS / PERFORMANCE
Purpose (detailed)	An FS-Device with FST parameters shall provide either a Dedicated Tool for the calculation of the TechParCRC value corresponding to the parameter setting or other adequate means such as a table within the user manual. Documentation of result in validation report recommended.
Precondition	–
Procedure	a) User manual: Dedicated Tool suitable for FS-Device? - .exe program - designation, - version, // check if version of dedicated tool is available - relation to FS-Device b) Evaluation 1) c) If no Dedicated Tool: Adequate means available d) Evaluation 2)
Test parameter	–
Post condition	Usable Dedicated Tool or adequate means available

TEST CASE RESULTS	CHECK / REACTION
Evaluation	1) Check items 2) Optional: adequate means sufficient and mentioned in assessment report
Test passed	All checks correct
Test failed (examples)	Any check incorrect
Report	Dedicated Tool OK: <yes/no> <ok | nok>

7 FS-Device configuration and parameterization tests

7.1 Overview

The FS-Device configuration and parameterization tests comprise the necessary information about the product to test, the FSP protocol parameter availability and limits including securing via CRC signature, the FST technology parameter availability and limits including securing via CRC signature, and setup of operational modes such as "Commissioning" and "Armed".

7.2 FS-Device meta data

7.2.1 Manuals and safety assessment certificate

Table 21 defines the test conditions for this test case.

Table 21 – Manuals and safety assessment certificate

TEST CASE ATTRIBUTES	IDENTIFICATION / REFERENCE
Identification (ID)	SDCI_FSTC_0020
Name	FSTCD_CONF_INFO_DOCUMENTS
Purpose (short)	Check user/safety manuals for exceptions, properties, and certificates
Equipment under test (EUT)	User/safety manual of FS-Device and Dedicated Tool
Test case version	1.0
Category / type	FS-Device test
Specification (clause)	[3] "highly recommended" feature status, Table 8, Annex H.6, [6] p2 (conventions)
Configuration / setup	–
TEST CASE	**CONDITIONS / PERFORMANCE**
Purpose (detailed)	Manufacturers/vendors are obliged to inform in a user manual about not implemented "highly recommended" features, and to provide a "Safety Manual" as well as a safety assessment certificate.
Precondition	–
Procedure	a) Identify in user manual not implemented "highly recommended" features b) Identify information in safety manual according to Annex H.6 in [3] c) Identify functional safety assessment report (certificate)
Test parameter	–
Post condition	–
TEST CASE RESULTS	**CHECK / REACTION**
Evaluation	1) Check exceptions in user manual 2) Check required parameters in safety manual 3) Check statements for relevant aspects of the particular standard (IEC 61508 /ISO13849), the assessment body, and the certificate number
Test passed	Exceptions permitted, and Safety Manual correct (at least WCDT, OFDT), and for OSSDe Devices cable length must be restricted to 20 m, and (see [3, Figure 15]) Certificate accepted and noted in test report
Test failed (examples)	Any check incorrect
Report	Documents OK: <yes/no> <ok | nok>

7.2.2 Connector and cable information

Table 22 defines the test conditions for this test case.

Table 22 – Connector and cable information

TEST CASE ATTRIBUTES	IDENTIFICATION / REFERENCE
Identification (ID)	SDCI_FSTC_0021
Name	FSTCD_CONF_INFO_CONNECTCABLE
Purpose (short)	Check user/safety manuals for connector and cable information (OSSDe)
Equipment under test (EUT)	User/safety manual of FS-Device and Dedicated Tool
Test case version	1.0
Category / type	FS-Device test
Specification (clause)	[3] 4.1.4, Figure 9
Configuration / setup	–

TEST CASE	CONDITIONS / PERFORMANCE
Purpose (detailed)	Check user/safety manuals for connector and cable information for OSSDe operation.
Precondition	–
Procedure	a) Identify in user manual connector Pin layout in case of M type connector b) Identify cable recommendations with respect to robustness and loop resistance
Test parameter	–
Post condition	–

TEST CASE RESULTS	CHECK / REACTION
Evaluation	1) Check Pin layout 2) Check recommendations on robustness and loop resistance
Test passed	Pin layouts are correct, and Robustness recommendations for cable coating such as "tear proof" and "cut resistant" as well as for loop resistance such that minimum supply voltages are guaranteed at maximum supply current are available
Test failed (examples)	Any check incorrect
Report	Documents OK: <yes/no> <ok | nok>

7.2.3 FS-Device default behavior

Table 23 defines the test conditions for this test case.

Table 23 – FS-Device default behavior

TEST CASE ATTRIBUTES	IDENTIFICATION / REFERENCE
Identification (ID)	SDCI_FSTC_0022
Name	FSTCD_CONF_INFO_DEFAULTBEHAVIOR
Purpose (short)	FS-Device information: Consumption, Ready pulse, test pulses, watchdog
Equipment under test (EUT)	User manual of FS-Device
Test case version	1.0
Category / type	FS-Device test
Specification (clause)	[3] Table 7, Table 8
Configuration / setup	–
TEST CASE	**CONDITIONS / PERFORMANCE**
Purpose (detailed)	FS-Device information: Power consumption, Ready pulse, test pulses, watchdog
Precondition	–
Procedure	a) Identify parameter "Power consumption" in safety/user manual b) Identify parameter "Time delay before availability" in safety/user manual c) Identify parameter "Test pulse duration (t_i)" in safety/user manual d) Identify parameter "Period of test pulses (T_P)" in safety/user manual e) Identify "Watchdog" value recommendations
Test parameter	–
Post condition	Memorize power consumption, Ready pulse, test pulses, watchdog
TEST CASE RESULTS	**CHECK / REACTION**
Evaluation	1) Check "Power consumption" information 2) Check parameter "Time delay before availability" and "FSP_Time2Ready" in IODD 3) Check parameter "Test pulse duration (t_i)" 4) Check parameter "Period of test pulses (T_P)" 5) Check values of "Watchdog" and default "FSP_Watchdog" in IODD
Test passed	Values and recommendations are indicated if > 200 mA and ≤ 1000 mA, and Parameter value corresponds to value of FSP_Time2Ready in IODD, and Parameter value within specified borders, and Parameter value within specified borders, and Parameter value corresponds to value of "FSP_Watchdog" in IODD
Test failed (examples)	Values are not indicated in case of > 200 mA or > 1000 mA, or any other check incorrect
Report	Documents OK: <yes/no> <ok | nok>

7.3 FSP parameter range limits and invalid values

7.3.1 Invalid value of parameter "FSP_Port"

Table 24 defines the test conditions for this test case.

Table 24 – Invalid value of parameter "FSP_Port"

TEST CASE ATTRIBUTES	IDENTIFICATION / REFERENCE
Identification (ID)	SDCI_FSTC_0023
Name	FSTCD_CONF_FSPD_PORTINVAL
Purpose (short)	Detection of invalid value of parameter "FSP_Port"
Equipment under test (EUT)	FS-Device
Test case version	1.0
Category / type	FS-Device test: test-to-fail
Specification (clause)	[3] Annex A
Configuration / setup	FS-Device-Tester-Unit

TEST CASE	CONDITIONS / PERFORMANCE
Purpose (detailed)	Detection of invalid value of parameter "FSP_Port" (outside specified range)
Precondition	EUT in OPERATE (configured for commissioning operation) FSDT in OPERATE (configured for commissioning operation)
Procedure	a) Write FSP authenticity parameter record (0x4200), e.g. via SMI_DeviceWrite *;see field test parameter* b) Evaluation 1) c) Evaluation 2)
Test parameter	FSP authenticity parameter record: FSCP_Authenticity_1 = 1, FSCP_Authenticity_2 = 2, FSP_Port = 0, FSP_AuthentCRC = 25195
Post condition	–

TEST CASE RESULTS	CHECK / REACTION
Evaluation	1) Check Write response 2) Check Events
Test passed	Negative Write response with one of (0x8030, 0x8032, 0x8040 or 0x8041), and No Events
Test failed (examples)	Incorrect Write response, and/or Unexpected Events
Report	Correct negative Write response: <yes/no> <ok | nok> No Events received: <yes/no> <ok | nok>

7.3.2 Invalid value of signature "FSP_AuthentCRC"

Table 25 defines the test conditions for this test case.

Table 25 – Invalid value of signature "FSP_AuthentCRC"

TEST CASE ATTRIBUTES	IDENTIFICATION / REFERENCE
Identification (ID)	SDCI_FSTC_0024
Name	FSTCD_CONF_FSPD_AUTHENTCRCINVAL
Purpose (short)	Detection of invalid value of signature "FSP_AuthentCRC"
Equipment under test (EUT)	FS-Device
Test case version	1.0
Category / type	FS-Device test: test-to-fail
Specification (clause)	[3] Annex A
Configuration / setup	FS-Device-Tester-Unit

TEST CASE	CONDITIONS / PERFORMANCE
Purpose (detailed)	Detection of invalid value of signature "FSP_AuthentCRC" (outside specified range)
Precondition	EUT in OPERATE (commissioning operation, FSP_TechParCRC = 0) FSDT in OPERATE (commissioning operation)
Procedure	a) Write FSP authenticity parameter record (0x4200), e.g. via SMI_DeviceWrite *;see field test parameter* b) Evaluation 1) c) Evaluation 2)
Test parameter	FSP authenticity parameter record: FSCP_Authenticity_1 = 1, FSCP_Authenticity_2 = 2, FSP_Port = 1, FSP_AuthentCRC = 11457
Post condition	–

TEST CASE RESULTS	CHECK / REACTION
Evaluation	1) Check Write response 2) Check Events
Test passed	Negative Write response with one of 0x8040, 0x8041 and No Events
Test failed (examples)	Incorrect Write response, and/or Unexpected Events
Report	Correct negative Write response: <yes/no> <ok | nok> No Events received: <yes/no> <ok | nok>

7.3.3 Invalid value of parameter "FSP_ProtVersion"

Table 26 defines the test conditions for this test case.

Table 26 – Invalid value of parameter "FSP_ProtVersion"

TEST CASE ATTRIBUTES	IDENTIFICATION / REFERENCE
Identification (ID)	SDCI_FSTC_0025
Name	FSTCD_CONF_FSPD_PROTVINVAL
Purpose (short)	Detection of invalid value of parameter "FSP_ProtVersion"
Equipment under test (EUT)	FS-Device
Test case version	1.0
Category / type	FS-Device test: test-to-fail
Specification (clause)	[3] Annex A
Configuration / setup	FS-Device-Tester-Unit

TEST CASE	CONDITIONS / PERFORMANCE
Purpose (detailed)	Detection of invalid value of parameter "FSP_ProtVersion" (outside IODD)
Precondition	EUT in OPERATE (commissioning operation, FSP_TechParCRC = 0) FSDT in OPERATE (commissioning operation)
Procedure	a) Write FSP protocol parameter record (0x4201), e.g. via SMI_DeviceWrite *;see field test parameter with A)* b) Evaluation 1) c) Write FSP protocol parameter record (0x4201), e.g. via SMI_DeviceWrite *;see field test parameter with B)* d) Evaluation 2)
Test parameter	FSP protocol parameter record for cases A) and B): FSP_ProtVersion = A) or B), *;see values at the end of field* FSP_ProtMode = defaultValue in IODD, FSP_Watchdog = defaultValue in IODD, FSP_IOStructCRC = defaultValue in IODD, FSP_TechParCRC = 0, FSP_ProtParCRC = valid CRC *;values for case A) or B)* A) FSP_ProtVersion = defaultValue in IODD - 1 B) FSP_ProtVersion = defaultValue in IODD + 1
Post condition	–

TEST CASE RESULTS	CHECK / REACTION
Evaluation	1) Check Write response 2) Check Write response
Test passed	Negative Write responses for Write attempts: In case of 1): 0x8030 (out of range) In case of 2): 0x8030 (out of range)
Test failed (examples)	Incorrect or no negative Write responses
Report	Correct negative Write responses: <yes/no> <ok | nok>

7.3.4 Invalid value of parameter "FSP_ProtMode"

Table 27 defines the test conditions for this test case.

Table 27 – Invalid value of parameter "FSP_ProtMode"

TEST CASE ATTRIBUTES	IDENTIFICATION / REFERENCE
Identification (ID)	SDCI_FSTC_0026
Name	FSTCD_CONF_FSPD_PMODEINVAL
Purpose (short)	Detection of invalid value of parameter "FSP_ProtMode"
Equipment under test (EUT)	FS-Device
Test case version	1.0
Category / type	FS-Device test: test-to-fail
Specification (clause)	[3] Annex A
Configuration / setup	FS-Device-Tester-Unit

TEST CASE	CONDITIONS / PERFORMANCE
Purpose (detailed)	Detection of invalid value of parameter "FSP_ProtMode" (outside specified range and IODD). This test also proves that test parameter values are not accepted by FS Device.
Precondition	EUT in OPERATE (commissioning operation, FSP_TechParCRC = 0) FSDT in OPERATE (commissioning operation)
Procedure	a) Write FSP protocol parameter record (0x4201), e.g. via SMI_DeviceWrite *;see field test parameter with A)* b) Evaluation 1) c) Write FSP protocol parameter record (0x4201), e.g. via SMI_DeviceWrite *;see field test parameter with B)* d) Evaluation 2) e) Write FSP protocol parameter record (0x4201), e.g. via SMI_DeviceWrite *;see field test parameter with C)* f) Evaluation 3) g) Write FSP protocol parameter record (0x4201), e.g. via SMI_DeviceWrite *;see field test parameter with D)* h) Evaluation 4)
Test parameter	FSP protocol parameter record for cases A), B), C). and D): FSP_ProtVersion = defaultValue in IODD; FSP_ProtMode = A), B), C), or D), *;see values at the end of field* FSP_Watchdog = defaultValue in IODD, FSP_IOStructCRC = defaultValue in IODD, FSP_TechParCRC = 0, FSP_ProtParCRC = valid CRC *;values for case A), B), C) or D)* A) FSP_ProtMode = defaultValue in IODD - 1 B) FSP_ProtMode = defaultValue in IODD + 1 C) FSP_ProtMode = 0xF9 D) FSP_ProtMode = 0xFA
Post condition	–

TEST CASE RESULTS	CHECK / REACTION
Evaluation	1) Check Write response 2) Check Write response 3) Check Write response 4) Check Write response
Test passed	Negative Write responses for Write attempts: In case of 1): 0x8030 (out of range) In case of 2): 0x8030 (out of range) In case of 3): 0x8030 (out of range) In case of 4): 0x8030 (out of range)
Test failed (examples)	Incorrect or no negative Write responses
Report	Correct negative Write responses: <yes/no> <ok | nok>

7.3.5 Invalid range of parameter "FSP_Watchdog"

Table 28 defines the test conditions for this test case.

Table 28 – Invalid range of parameter "FSP_Watchdog"

TEST CASE ATTRIBUTES	IDENTIFICATION / REFERENCE
Identification (ID)	SDCI_FSTC_0027
Name	FSTCD_CONF_FSPD_WDOGRANGE
Purpose (short)	Detection of invalid range of parameter "FSP Watchdog"
Equipment under test (EUT)	FS-Device
Test case version	1.0
Category / type	FS-Device test: test-to-fail
Specification (clause)	[3] Annex A
Configuration / setup	FS-Device-Tester-Unit

TEST CASE	CONDITIONS / PERFORMANCE
Purpose (detailed)	Detection of invalid value of parameter "FSP_Watchdog" (outside specified range and IODD). FSP parameter range value test based on IODD/specification
Precondition	EUT in OPERATE (commissioning operation, FSP_TechParCRC = 0) FSDT in OPERATE (commissioning operation)
Procedure	a) Write FSP protocol parameter record (0x4201), e.g. via SMI_DeviceWrite *;see field test parameter with A)* b) Evaluation 1) c) Write FSP protocol parameter record (0x4201), e.g. via SMI_DeviceWrite *;see field test parameter with B)* d) Evaluation 2) e) Write FSP protocol parameter record (0x4201), e.g. via SMI_DeviceWrite *;see field test parameter with C)* f) Evaluation 3)
Test parameter	FSP protocol parameter record for cases A), B), and optionally C): FSP_ProtVersion = defaultValue in IODD; FSP_ProtMode = defaultValue in IODD, FSP_Watchdog = A), B), or C), *;see values at the end of field* FSP_IOStructCRC = defaultValue in IODD, FSP_TechParCRC = 0, FSP_ProtParCRC = valid CRC *;values for case A), B), C) or D)* A) FSP_Watchdog = 0 B) FSP_Watchdog = lower Value in IODD - 1 C) FSP_Watchdog = upper Value in IODD +1 *;only if upper Value in IODD < 65535*
Post condition	–

TEST CASE RESULTS	CHECK / REACTION
Evaluation	1) Check Write response and Event 2) Check Write response and Event 3) Check Write response and Event
Test passed	Negative Write responses for Write attempts: In case of 1): 0x8032 (below limit) In case of 2): 0x8032 (below limit) In case of 3): 0x8031 (above limit)
Test failed (examples)	Incorrect or no negative Write responses
Report	Correct negative Write responses: <yes/no> <ok | nok>

7.3.6 Invalid value of signature "FSP_ProtParCRC"

Table 29 defines the test conditions for this test case.

Table 29 – Invalid value of signature "FSP_ProtParCRC"

TEST CASE ATTRIBUTES	IDENTIFICATION / REFERENCE
Identification (ID)	SDCI_FSTC_0028
Name	FSTCD_CONF_FSPD_PRCRCINVAL
Purpose (short)	Detection of invalid value of signature "FSP_ProtParCRC"
Equipment under test (EUT)	FS-Device
Test case version	1.0
Category / type	FS-Device test: test-to-fail
Specification (clause)	[3] Annex A
Configuration / setup	FS-Device-Tester-Unit

TEST CASE	CONDITIONS / PERFORMANCE
Purpose (detailed)	Detection of invalid value of signature "FSP_ProtParCRC" based on calculation
Precondition	EUT in OPERATE (commissioning operation, FSP_TechParCRC = 0) FSDT in OPERATE (commissioning operation)
Procedure	a) Write FSP protocol parameter record (0x4201), e.g. via SMI_DeviceWrite *;see field test parameter* b) Evaluation 1) c) Evaluation 2)
Test parameter	FSP protocol parameter record: FSP_ProtVersion = defaultValue in IODD; FSP_ProtMode = defaultValue in IODD, FSP_Watchdog = defaultValue in IODD, FSP_IOStructCRC = defaultValue in IODD, FSP_TechParCRC = 0, FSP_ProtParCRC = invalid CRC *;e.g. decrement calculated value*
Post condition	–

TEST CASE RESULTS	CHECK / REACTION
Evaluation	1) Check Write response 2) Check Events
Test passed	Negative Write response with one of 0x8040, 0x8041, and No Events
Test failed (examples)	Incorrect Write response, and/or Unexpected Events
Report	Correct negative Write response: <yes/no> <ok | nok> No Events received: <yes/no> <ok | nok>

7.3.7 Matching of Read-only FSP-parameters with Default values in the IODD

Table 30 defines a test that checks whether the default values of read-only FSP Parameter that are defined in the IODD are identical to the values read from the Device.

Table 30 – FSP read-only parameter match

TEST CASE ATTRIBUTES	IDENTIFICATION / REFERENCE
Identification (ID)	SDCI_FSTC_207
Name	FSTCD_CONF_FSPRO
Purpose (short)	The default values in IODD of FSP-read-only parameters should be identical to what is read out from the FS-Device.
Equipment under test (EUT)	FS-Device
Test case version	1.0
Category / type	FS-Device test: test-to-pass
Specification (clause)	[3]
Configuration / setup	FS-Device-Tester-Unit
TEST CASE	**CONDITIONS / PERFORMANCE**
Purpose (detailed)	Read-only FSP parameters of FS-Device as indicated in IODD: FSP_TimeToReady from FS-Device matches Value in IODD FSP_MinShutDownTime from FS-Device matches Value in IODD FSP_ParamDescCRC from FS-Device matches Value in IODD FSP_WCDT from FS-Device matches Value in IODD FSP_OFDT from FS-Device matches Value in IODD
Precondition	EUT in OPERATE (commissioning operation, FSP_TechParCRC = 0) FSDT in OPERATE (commissioning operation)
Procedure	a) Get Index of parameter in fsp_ro_param (start with first, subindex is always 0) b) Read parameter c) Evaluation 1) d) Repeat from a)
Test parameter	fsp_ro_param = {16912 (FSP_TimeToReady), 16913 (FSP_MinShutDownTime), 16914 (FSP_ParamDescCRC), 16915 (WCDT), 16916 (OFDT)}
Post condition	–
TEST CASE RESULTS	**CHECK / REACTION**
Evaluation	1) Check Read response and compare the value with the value from IODD
Test passed	All responses have positive results, and all values are matching the default values in the IODD.
Test failed (examples)	Any response is negative, or at least one mismatch between FS-Device Parameter and IODD default value
Report	Response positive: <yes/no> <ok | nok>

7.4 FST parameterization

7.4.1 Default FST parameter (for OSSDe operation)

Table 31 defines the test conditions for this test case.

Table 31 – Default FST parameter (for OSSDe operation)

TEST CASE ATTRIBUTES	IDENTIFICATION / REFERENCE
Identification (ID)	SDCI_FSTC_0029
Name	FSTCD_CONF_DEFAULTFST
Purpose (short)	FST parameter of FS-Device in delivery state retrieved as indicated in IODD
Equipment under test (EUT)	FS-Device
Test case version	1.0
Category / type	FS-Device test: test-to-pass
Specification (clause)	[3]
Configuration / setup	FS-Device-Tester-Unit

TEST CASE	CONDITIONS / PERFORMANCE
Purpose (detailed)	FST parameter of FS-Device in delivery state retrieved as indicated in IODD. FSP_TechParCRC from FS-Device matches calculation performed by Test Tool.
Precondition	EUT in delivery state
Procedure	a) Read parameter in fst_param (start with first value) *;see IODD* b) Evaluation 1) c) Repeat with next parameter from a) *;see field test parameter* d) Calculate FSP_TechParCRC for all fst_param using Dedicated Tool / User manual e) Read parameter FSP_TechParCRC f) Evaluation 2)
Test parameter	fst_param = {all FST parameter in IODD}
Post condition	–

TEST CASE RESULTS	CHECK / REACTION
Evaluation	1) Compare value "defaultValue" of FST parameter in IODD with read parameter from EUT 2) Compare calculated FSP_TechParCRC with FSP_TechParCRC read from EUT
Test passed	All comparisons show equal values
Test failed (examples)	Any comparison is showing not equal values
Report	Comparison equal: <yes/no> <ok | nok>

7.4.2 IODD versus FST parameters in FS-Device

Table 32 defines the test conditions for this test case.

Table 32 – IODD versus FST parameters in FS-Device

TEST CASE ATTRIBUTES	IDENTIFICATION / REFERENCE
Identification (ID)	SDCI_FSTC_0030
Name	FSTCD_CONF_IODDFSTPAR
Purpose (short)	FST parameter in IODD accessible in FS-Device as indicated
Equipment under test (EUT)	FS-Device
Test case version	1.0
Category / type	FS-Device test: test-to-pass
Specification (clause)	[3]
Configuration / setup	FS-Device-Tester-Unit

TEST CASE	CONDITIONS / PERFORMANCE
Purpose (detailed)	FST parameter in IODD accessible in FS-Device as indicated
Precondition	EUT in OPERATE (commissioning operation, FSP_TechParCRC = 0) FSDT in OPERATE (commissioning operation)
Procedure	a) Get Index/Subindex of parameter in fst_param (start with first) b) Read parameter if read access allowed c) Evaluation 1) d) Write parameter with read value if write access allowed e) Evaluation 2) f) Repeat from a)
Test parameter	fst_param = {all FST parameter in IODD}
Post condition	–

TEST CASE RESULTS	CHECK / REACTION
Evaluation	1) Check Read response 2) Check Write response
Test passed	All responses positive
Test failed (examples)	Any response negative
Report	Responses positive: <yes/no> <ok | nok>

7.4.3 TechParCRC via Dedicated Tool

Table 33 defines the test conditions for this test case.

Table 33 – TechParCRC via Dedicated Tool

TEST CASE ATTRIBUTES	IDENTIFICATION / REFERENCE
Identification (ID)	SDCI_FSTC_0031
Name	FSTCD_CONF_CRCDEDTOOL
Purpose (short)	CRC signature calculation of "Dedicated Tool" fits to calculation of FS-Device
Equipment under test (EUT)	FS-Device and Dedicated Tool or alternative method
Test case version	1.1
Category / type	FS-Device test: test-to-pass
Specification (clause)	[3]
Configuration / setup	FS-Device-Tester

TEST CASE	CONDITIONS / PERFORMANCE
Purpose (detailed)	TechParCRC signature calculation of "Dedicated Tool" fits to calculation of FS-Device (FSP_TechParCRC)
Precondition	EUT in delivery state
Procedure	a) Set some FST parameter of EUT and retrieve FSP_TechParCRC ;see user manual for method b) Write FST parameter to EUT c) Evaluation 1) d) Write valid FSP_AuthRecord and FSP_ProtocolRecord to EUT e) Evaluation 2) f) Set valid Set PortConfig with FSP_VerifyRecord ; e.g. via SMI_PortConfiguration using ArgBlock 0x8100 g) Wait for Port state "SPDU_EXCHANGE" ; e.g. via ArgBlock FSPortStatusList h) Evaluation 3)
Test parameter	–
Post condition	–

TEST CASE RESULTS	CHECK / REACTION
Evaluation	1) Check Write responses 2) Check Write responses 3) Check Port state
Test passed	All checks correct
Test failed (examples)	Any check incorrect
Report	Values OK: <yes/no> <ok | nok>

7.4.4 Switch to OSSDe operation after parameterization

Table 34 defines the test conditions for this test case.

Table 34 – Switch to OSSDe operation after parameterization

TEST CASE ATTRIBUTES	IDENTIFICATION / REFERENCE
Identification (ID)	SDCI_FSTC_0032
Name	FSTCD_CONF_SWTOOSSD
Purpose (short)	FST parameterization cycle: COM → OSSDe → COM
Equipment under test (EUT)	FS-Device with OSSDe capability
Test case version	1.0
Category / type	FS-Device test: test-to-pass
Specification (clause)	[3]
Configuration / setup	FS-Device-Tester

TEST CASE	CONDITIONS / PERFORMANCE	
Purpose (detailed)	FST parameterization cycle: COM → OSSDe → COM	
Precondition	EUT: in out-of-box configuration	
Procedure	a) Set PortConfig with FSP_VerifyRecord with values of A) and B) e.g. via SMI_PortConfiguration using ArgBlock 0x8100 *;see field test parameter* b) Wait for port state OPERATE c) Write FSP protocol parameter record (0x4201) *;see A)* d) Evaluation 1) e) Write FSP authenticity parameter record (0x4200) *;see B)* f) Evaluation 2) g) Port power Off/On e.g. via SMI_PortPowerOffOn h) Wait for Port state "SCL_ENABLED" e.g. via ArgBlock FSPortStatusList i) Evaluation 3) j) Set PortConfig to OSSDe k) Port power Off/On e.g. via SMI_PortPowerOffOn l) Wait FSP_TimeToReady m) Get PDin e.g. via SMI_FSPDInOut service *;return ArgBlock "FSPDInOut"* m) Evaluation 4) n) Set PortConfig with FSP_VerifyRecord with values of A) and B) e.g. via SMI_PortConfiguration using ArgBlock 0x8100 *;see test parameter* o) Port power Off/On p) Wait for Port state "SCL_ENABLED" q) Evaluation 5)	
Test parameter	A) FSP protocol parameter record: FSP_ProtVersion = defaultValue in IODD, FSP_ProtMode = defaultValue in IODD, FSP_Watchdog = defaultValue in IODD, FSP_IOStructCRC = defaultValue in IODD, FSP_TechParCRC = valid CRC signature, FSP_ProtParCRC = valid CRC signature	B) FSP authenticity parameter: FSCP_Authenticity_1 = 1, FSCP_Authenticity_2 = 2, FSP_Port = 1, FSP_AuthentCRC = 11456 *;CRC: Responsibility of tester*
Post condition	–	

TEST CASE RESULTS	CHECK / REACTION
Evaluation	1) Check Write response 2) Check Write response 3) Check Port state 4) Check OSSDe input (e.g. via ArgBlock FSPDInOut.SPDUIn0) 5) Check Port state
Test passed	All checks correct
Test failed (examples)	Any check incorrect
Report	Values OK: <yes/no> <ok | nok>

7.5 Setup operational modes (Annex G)

7.5.1 Setup "commissioning test"

Table 36 defines the test conditions for this test case.

Table 35 – Setup "commissioning test"

TEST CASE ATTRIBUTES	IDENTIFICATION / REFERENCE
Identification (ID)	SDCI_FSTC_0033
Name	FSTCD_CONF_SETUPCOMMI
Purpose (short)	Setup "commissioning test" as specified
Equipment under test (EUT)	FS-Device
Test case version	1.0
Category / type	FS-Device test, test-to-pass
Specification (clause)	[3] Annex G
Configuration / setup	FS-Device-Tester (FSDT)

TEST CASE	CONDITIONS / PERFORMANCE
Purpose (detailed)	Setup "commissioning test" as specified.
Precondition	EUT: in out-of-box configuration
Procedure	a) Set PortConfig with FSP_VerifyRecord with values of A) and B) e.g. via SMI_PortConfiguration using ArgBlock 0x8100 *;see field test parameter* b) Wait for port state OPERATE c) Write FSP protocol parameter record (0x4201) *;see A)* d) Evaluation 1) e) Write FSP authenticity parameter record (0x4200) *;see B)* f) Evaluation 2) g) Port power Off/On e.g. via SMI_PortPowerOffOn h) Wait for Port state "SCL_ENABLED" e.g. via ArgBlock FSPortStatusList i) Evaluation 3)
Test parameter	A) FSP protocol parameter record: FSP_ProtVersion = defaultValue in IODD, FSP_ProtMode = defaultValue in IODD, FSP_Watchdog = defaultValue in IODD, FSP_IOStructCRC = defaultValue in IODD, FSP_TechParCRC = 0, FSP_ProtParCRC = valid CRC signature *;responsibility of tester* B) FSP authenticity parameter record: FSCP_Authenticity_1 = 1, FSCP_Authenticity_2 = 2, FSP_Port = 1, FSP_AuthentCRC = 11456
Post condition	–

TEST CASE RESULTS	CHECK / REACTION
Evaluation	1) Check Write response 2) Check Write response 3) Check Port state
Test passed	All checks correct
Test failed (examples)	Any check incorrect
Report	Values OK: <yes/no> <ok | nok>

7.5.2 Setup "armed"

Table 36 defines the test conditions for this test case.

Table 36 – Setup "armed"

TEST CASE ATTRIBUTES	IDENTIFICATION / REFERENCE
Identification (ID)	SDCI_FSTC_0034
Name	FSTCD_CONF_SETUPARMED
Purpose (short)	Setup "armed" as specified
Equipment under test (EUT)	FS-Device
Test case version	1.0
Category / type	FS-Device test: test-to-pass
Specification (clause)	[3] Annex G
Configuration / setup	FS-Device-Tester-Unit

TEST CASE	CONDITIONS / PERFORMANCE
Purpose (detailed)	Setup "armed" as described
Precondition	EUT in OPERATE (commissioning operation, FSP_TechParCRC = 0) FSDT in OPERATE (commissioning operation)
Procedure	a) Set PortConfig with FSP_VerifyRecord with values of A) and B) e.g. via SMI_PortConfiguration using ArgBlock 0x8100 *;see field test parameter* b) Wait for Port state "SCL_ENABLED" e.g. via ArgBlock FSPortStatusList c) Write FSP protocol parameter record (0x4201) *;see A)* d) Evaluation 1) e) Write FSP authenticity parameter record (0x4200) *;see B)* f) Evaluation 2) g) Port power Off/On e.g. via SMI_PortPowerOffOn h) Wait for Port state "SCL_ENABLED" e.g. via ArgBlock FSPortStatusList i) Evaluation 3)
Test parameter	A) FSP protocol parameter record: FSP_ProtVersion = defaultValue in IODD, FSP_ProtMode = defaultValue in IODD, FSP_Watchdog = defaultValue in IODD, FSP_IOStructCRC = defaultValue in IODD, FSP_TechParCRC = valid CRC signature *;responsibility of tester* FSP_ProtParCRC = valid CRC signature *;responsibility of tester* B) FSP authenticity parameter record: FSCP_Authenticity_1 = 1, FSCP_Authenticity_2 = 2, FSP_Port = 1, FSP_AuthentCRC = 11456
Post condition	–

TEST CASE RESULTS	CHECK / REACTION
Evaluation	1) Check Write response 2) Check Write response 3) Check Port state
Test passed	All checks correct
Test failed (examples)	Any check incorrect
Report	Values OK: <yes/no> <ok | nok>

8 FS-Device safety measure tests

8.1 Overview

The FS-Device protocol tests comprise the various constellations of the VerifyRecord prior to start of the Safety Communication Layer (SCL). It also comprises special tests such as the protocol watchdog timer and evidence of correct implementation of the watchdog trigger as well as the exceptional handling whenever a CRC signature calculation results in "0".

8.2 Verification (VerifyRecord)

8.2.1 Correct VerifyRecord and FSP_TechParCRC ("armed")

Table 37 defines the test conditions for this test case. It checks whether an FS-Device starts SCL communication in "armed" mode (operation not monitored) after reception of a valid VerifyRecord and FSP_TechParCRC ≠ 0.

Table 37 – Correct VerifyRecord and FSP_TechParCRC ("armed")

TEST CASE ATTRIBUTES	IDENTIFICATION / REFERENCE
Identification (ID)	SDCI_FSTC_0035
Name	FSTCD_PARM_VRFY_ARMED
Purpose (short)	Correct VerifyRecord and FSP_TechParCRC ("armed")
Equipment under test (EUT)	FS-Device
Test case version	1.0
Category / type	FS-Device PREOPERATE test: test-to-pass
Specification (clause)	[3] clause 10.4.1, clause 10.4.3.1, clause 11.7.6, clause G.1
Configuration / setup	FS-Device-Tester

TEST CASE	CONDITIONS / PERFORMANCE
Purpose (detailed)	Make sure that an FS Device is going to start SCL communication (“armed”) after reception of a valid VerifyRecord with FSP_TechParCRC ≠ 0.
Precondition	EUT: Configured for armed operation *;see field test parameter* FSDT: Port config DEACTIVATED
Procedure	a) Set PortConfig with FSP_VerifyRecord with values of A) and B) e.g. via SMI_PortConfiguration using ArgBlock 0x8100 *;see field test parameter* b) Wait for Port state "SCL_ENABLED" e.g. via ArgBlock FSPortStatusList c) Repeat SMI_FSPDInOut until change (observe <timeout>) *;ArgBlock FSPDInOut* d) Evaluation 1)
Test parameter	A) FSP protocol parameter record: FSP_ProtVersion = defaultValue in IODD, FSP_ProtMode = defaultValue in IODD, FSP_Watchdog = defaultValue in IODD, FSP_IOStructCRC = defaultValue in IODD, FSP_TechParCRC = valid CRC signature *;responsibility of tester* FSP_ProtParCRC = valid CRC signature *;responsibility of tester* B) FSP authenticity parameter record: FSCP_Authenticity_1 = 1, FSCP_Authenticity_2 = 2, FSP_Port = 1, FSP_AuthentCRC = 11456 <timeout> = 1s
Post condition	–

TEST CASE RESULTS	CHECK / REACTION
Evaluation	1) Check change
Test passed	No <timeout> occurred
Test failed (examples)	<timeout>
Report	SPDU exchange: <negative/positive> <ok | nok>

750

8.2.2 Correct VerifyRecord and FSP_TechParCRC ("commissioning")

Table 38 defines the test conditions for this test case. It checks whether an FS-Device starts SCL communication in "commissioning - test" mode (operation monitored by personnel) after receiving a valid VerifyRecord and FSP_TechParCRC =0.

Table 38 – Correct VerifyRecord and FSP_TechParCRC ("commissioning")

TEST CASE ATTRIBUTES	IDENTIFICATION / REFERENCE
Identification (ID)	SDCI_FSTC_0036
Name	FSTCD_PARM_VRFY_COMMISTEST
Purpose (short)	Correct VerifyRecord and FSP_TechParCRC ("commissioning test")
Equipment under test (EUT)	FS-Device
Test case version	1.0
Category / type	FS-Device PREOPERATE test: test-to-pass
Specification (clause)	[3] clause 10.4.1, clause 10.4.3.1, clause 11.7.6, clause G.1
Configuration / setup	FS-Device-Tester

TEST CASE	CONDITIONS / PERFORMANCE
Purpose (detailed)	Make sure that an FS Device is going to start SCL communication (“commissioning test”) when receiving a valid VerifyRecord with FSP_TechParCRC = 0.
Precondition	EUT configured for commissioning operation *;see field test parameter* FSDT Port config DEACTIVATED
Procedure	a) Set PortConfig with FSP_VerifyRecord with values of A) and B) e.g. via SMI_PortConfiguration using ArgBlock 0x8100 *;see field test parameter* b) Wait for Port state "SCL_ENABLED" e.g. via ArgBlock FSPortStatusList c) Repeat SMI_FSPDInOut until change (observe <timeout>) *;ArgBlock FSPDInOut* d) Evaluation 1)
Test parameter	A) FSP protocol parameter record: FSP_ProtVersion = defaultValue in IODD, FSP_ProtMode = defaultValue in IODD, FSP_Watchdog = defaultValue in IODD, FSP_IOStructCRC = defaultValue in IODD, FSP_TechParCRC = 0, FSP_ProtParCRC = valid CRC signature *;responsibility of tester* B) FSP authenticity parameter record: FSCP_Authenticity_1 = 1, FSCP_Authenticity_2 = 2, FSP_Port = 1, FSP_AuthentCRC = 11456
Post condition	–

TEST CASE RESULTS	CHECK / REACTION
Evaluation	1) Check change
Test passed	No <timeout>
Test failed (examples)	<timeout>
Report	SPDU exchange: <negative/positive> <ok | nok>

8.2.3 Missing VerifyRecord at start-up ("armed")

Table 39 defines the test conditions for this test case. It checks whether an FS-Device refuses to start SCL communication when VerifyRecord is missing in "armed" mode (operation not monitored).

Table 39 – Missing VerifyRecord at start-up ("armed")

TEST CASE ATTRIBUTES	IDENTIFICATION / REFERENCE
Identification (ID)	SDCI_FSTC_0037
Name	FSTCD_PARM_VRFY_ARMEDNOVFY
Purpose (short)	Missing VerifyRecord at start-up ("armed")
Equipment under test (EUT)	FS-Device
Test case version	1.0
Category / type	FS-Device PREOPERATE test: test-to-fail
Specification (clause)	[3] clause 10.4.1, clause 10.4.3.1, clause 11.7.6, clause G.1
Configuration / setup	FS-Device-Tester

TEST CASE	CONDITIONS / PERFORMANCE
Purpose (detailed)	Make sure that an FS-Device is not going to start SCL communication without receiving a valid and matching VerifyRecord within twice the time required for regular start-up.
Precondition	EUT configured for armed operation *;see field test parameter* FSDT Port config DEACTIVATED
Procedure	a) Set PortConfig with FSP_VerifyRecord with values of A) and B) e.g. via SMI_PortConfiguration using ArgBlock 0x8100 *;see field test parameter* FSDT: Do NOT send FSP_VerifyRecord b) Wait for Port state "OPERATE" e.g. via ArgBlock FSPortStatusList c) Evaluation 1) d) Evaluation 2)
Test parameter	A) FSP protocol parameter record: FSP_ProtVersion = defaultValue in IODD, FSP_ProtMode = defaultValue in IODD, FSP_Watchdog = defaultValue in IODD, FSP_IOStructCRC = defaultValue in IODD, FSP_TechParCRC = valid CRC signature *;responsibility of tester* FSP_ProtParCRC = valid CRC signature *;responsibility of tester* B) FSP authenticity parameter record: FSCP_Authenticity_1 = 1, FSCP_Authenticity_2 = 2, FSP_Port = 1, FSP_AuthentCRC = 11456
Post condition	–

TEST CASE RESULTS	CHECK / REACTION
Evaluation	1) Check Port state 2) Check Events
Test passed	Port state is “OPERATE”, and Event 0xB00A received
Test failed (examples)	Any check incorrect
Report	Port state OPERATE: <negative/positive> <ok | nok> Event 0xB00A received: <yes/no> <ok | nok>

8.2.4 Missing VerifyRecord at start-up ("commissioning")

Table 40 defines the test conditions for this test case. It checks whether an FS-Device refuses to start SCL communication when VerifyRecord is missing in "commissioning – test" mode (monitored operation).

Table 40 – Missing VerifyRecord at start-up ("commissioning")

TEST CASE ATTRIBUTES	IDENTIFICATION / REFERENCE
Identification (ID)	SDCI_FSTC_0038
Name	FSTCD_PARM_VRFY_TESTNOVFY
Purpose (short)	Missing VerifyRecord at start-up ("commissioning test")
Equipment under test (EUT)	FS-Device
Test case version	1.0
Category / type	FS-Device PREOPERATE test: test-to-fail
Specification (clause)	[3] clause 10.4.1, clause 10.4.3.1, clause 11.7.6, clause G.1
Configuration / setup	FS-Device-Tester

TEST CASE	CONDITIONS / PERFORMANCE
Purpose (detailed)	Make sure that an FS Device is not going to start SCL communication ("commissioning test") without receiving a valid VerifyRecord within twice the time required for regular start-up.
Precondition	EUT configured for commissioning operation *;see field test parameter* FSDT Port config DEACTIVATED
Procedure	a) Set PortConfig with FSP_VerifyRecord with values of A) and B) e.g. via SMI_PortConfiguration using ArgBlock 0x8100 *;see field test parameter* FSDT: Do NOT send FSP_VerifyRecord b) Wait for Port state "OPERATE" e.g. via ArgBlock FSPortStatusList c) Evaluation 1) d) Evaluation 2)
Test parameter	A) FSP protocol parameter record: FSP_ProtVersion = defaultValue in IODD, FSP_ProtMode = defaultValue in IODD, FSP_Watchdog = defaultValue in IODD, FSP_IOStructCRC = defaultValue in IODD, FSP_TechParCRC = 0, FSP_ProtParCRC = valid CRC signature *;responsibility of tester* B) FSP authenticity parameter record: FSCP_Authenticity_1 = 1, FSCP_Authenticity_2 = 2, FSP_Port = 1, FSP_AuthentCRC = 11456
Post condition	–

TEST CASE RESULTS	CHECK / REACTION
Evaluation	1) Check Port state 2) Check Events
Test passed	Port state is "OPERATE", and Event 0xB00A received
Test failed (examples)	Any check incorrect
Report	Port state OPERATE: <negative/positive> <ok | nok> Event 0xB00A received: <yes/no> <ok | nok>

8.2.5 Incorrect FSP_TechParCRC ("commissioning")

Table 41 defines the test conditions for this test case. It checks whether an FS-Device refuses to start SCL communication when FSP_TechParCRC ≠ 0 in "commissioning – test" mode (monitored operation). An Event shall be raised.

Table 41 – Incorrect FSP_TechParCRC ("commissioning")

TEST CASE ATTRIBUTES	IDENTIFICATION / REFERENCE
Identification (ID)	SDCI_FSTC_0039
Name	FSTCD_PARM_VRFY_TECHPARN0
Purpose (short)	Incorrect FSP_TechParCRC when "commissioning test"
Equipment under test (EUT)	FS-Device
Test case version	1.0
Category / type	FS-Device PREOPERATE test: test-to-fail
Specification (clause)	[3] clause 10.4.1, clause 10.4.3.1, clause 11.7.6, clause G.1
Configuration / setup	FS-Device-Tester

TEST CASE	CONDITIONS / PERFORMANCE
Purpose (detailed)	Make sure that an FS Device is not going to start SCL communication (“commissioning test”) without receiving a valid VerifyRecord with FSP_TechParCRC = 0.
Precondition	EUT configured for commissioning operation *;see A) and B)* FSDT port config DEACTIVATED
Procedure	a) Set PortConfig with FSP_VerifyRecord with values of C) and B) e.g. via SMI_PortConfiguration using ArgBlock 0x8100 *;see field test parameter* b) Wait for Port state "OPERATE" e.g. via ArgBlock FSPortStatusList c) Evaluation 1) d) Evaluation 2)
Test parameter	A) FSP protocol parameter record: FSP_ProtVersion = defaultValue in IODD, FSP_ProtMode = defaultValue in IODD, FSP_Watchdog = defaultValue in IODD, FSP_IOStructCRC = defaultValue in IODD, FSP_TechParCRC = 0, FSP_ProtParCRC = valid CRC signature *;responsibility of tester* B) FSP authenticity parameter record: FSCP_Authenticity_1 = 1, FSCP_Authenticity_2 = 2, FSP_Port = 1, FSP_AuthentCRC = 11456 C) FSP protocol parameter record: FSP_ProtVersion = defaultValue in IODD, FSP_ProtMode = defaultValue in IODD, FSP_Watchdog = defaultValue in IODD, FSP_IOStructCRC = defaultValue in IODD, FSP_TechParCRC = valid CRC signature *;responsibility of tester* FSP_ProtParCRC = valid CRC signature *;responsibility of tester*
Post condition	–

TEST CASE RESULTS	CHECK / REACTION
Evaluation	1) Check Port state 2) Check Events
Test passed	Port state is “OPERATE”, and Event 0xB007 received
Test failed (examples)	Any check incorrect
Report	Port state OPERATE: <negative/positive> <ok | nok> Event 0xB007 received: <yes/no> <ok | nok>

8.2.6 Incorrect FSP_TechParCRC ("armed")

Table 42 defines the test conditions for this test case. It checks whether an FS-Device refuses to start SCL communication when FSP_TechParCRC = 0 in "armed" mode (operation not monitored). An Event shall be raised.

Table 42 – Incorrect FSP_TechParCRC ("armed")

TEST CASE ATTRIBUTES	IDENTIFICATION / REFERENCE
Identification (ID)	SDCI_FSTC_0040
Name	FSTCD_PARM_VRFY_TECHPAR0
Purpose (short)	Incorrect FSP_TechParCRC ("armed")
Equipment under test (EUT)	FS-Device
Test case version	1.0
Category / type	FS-Device PREOPERATE test: test-to-fail
Specification (clause)	[3] clause 10.4.1, clause 10.4.3.1, clause 11.7.6, clause G.1
Configuration / setup	FS-Device-Tester

TEST CASE	CONDITIONS / PERFORMANCE
Purpose (detailed)	Make sure that an FS Device is not going to start SCL communication ("armed") without receiving a valid VerifyRecord with FSP_TechParCRC ≠ 0.
Precondition	EUT configured for armed operation *;see A) and B)* FSDT port config DEACTIVATED
Procedure	a) Set PortConfig with FSP_VerifyRecord with values of C) and B) e.g. via SMI_PortConfiguration using ArgBlock 0x8100 *;see field test parameter* b) Wait for Port state "OPERATE" e.g. via ArgBlock FSPortStatusList c) Evaluation 1) d) Evaluation 2)
Test parameter	A) FSP protocol parameter record: FSP_ProtVersion = defaultValue in IODD, FSP_ProtMode = defaultValue in IODD, FSP_Watchdog = defaultValue in IODD, FSP_IOStructCRC = defaultValue in IODD, FSP_TechParCRC = valid CRC signature *;responsibility of tester* FSP_ProtParCRC = valid CRC signature B) FSP authenticity parameter record: FSCP_Authenticity_1 = 1, FSCP_Authenticity_2 = 2, FSP_Port = 1, FSP_AuthentCRC = 11456 C) FSP protocol parameter record: FSP_ProtVersion = defaultValue in IODD, FSP_ProtMode = defaultValue in IODD, FSP_Watchdog = defaultValue in IODD, FSP_IOStructCRC = defaultValue in IODD, *;responsibility of tester* FSP_TechParCRC = valid CRC signature + 1, FSP_ProtParCRC = valid CRC signature *;responsibility of tester*
Post condition	–

TEST CASE RESULTS	CHECK / REACTION
Evaluation	1) Check Port state 2) Check Events
Test passed	Port state is "OPERATE", and Event 0xB007 received
Test failed (examples)	Any check incorrect
Report	Port state OPERATE: <negative/positive> <ok | nok> Event 0xB007 received: <yes/no> <ok | nok>

8.2.7 Unexpected authenticity 1 ("armed")

Table 43 defines the test conditions for this test case. It checks whether an FS-Device refuses to start SCL communication in case of VerifyRecord with unexpected authenticity 1 in "armed" mode (operation not monitored). This corresponds to the use case of a misconnected FS-Device to a correct Port but to an incorrect FS-Master. In this case an Event shall be raised.

Table 43 – Unexpected authenticity 1 ("armed")

TEST CASE ATTRIBUTES	IDENTIFICATION / REFERENCE
Identification (ID)	SDCI_FSTC_0041
Name	FSTCD_PARM_VRFY_AUTH1WRONG
Purpose (short)	Unexpected authenticity 1 ("armed")
Equipment under test (EUT)	FS-Device
Test case version	1.0
Category / type	FS-Device PREOPERATE test: test-to-fail
Specification (clause)	[3] clause 10.4.1, clause 10.4.3.1, clause 11.7.6, clause G.1, clause B.1
Configuration / setup	FS-Device-Tester

TEST CASE	CONDITIONS / PERFORMANCE
Purpose (detailed)	Make sure that an FS Device is not going to start SCL communication (“armed”) when receiving VerifyRecord with unexpected AUTH1 parameter.
Precondition	EUT configured for armed operation *;see A) and B)* FSDT Port config DEACTIVATED
Procedure	a) Set PortConfig with FSP_VerifyRecord with values of A) and C) e.g. via SMI_PortConfiguration using ArgBlock 0x8100 *;see field test parameter* b) Wait for Port state "OPERATE" e.g. via ArgBlock FSPortStatusList c) Evaluation 1) d) Evaluation 2)
Test parameter	A) FSP protocol parameter record: FSP_ProtVersion = defaultValue in IODD, FSP_ProtMode = defaultValue in IODD, FSP_Watchdog = defaultValue in IODD, FSP_IOStructCRC = defaultValue in IODD, FSP_TechParCRC = valid CRC signature *;responsibility of tester* FSP_ProtParCRC = valid CRC signature B) FSP authenticity parameter record: FSCP_Authenticity_1 = 1, FSCP_Authenticity_2 = 2, FSP_Port = 1, FSP_AuthentCRC = 11456 C) FSP authenticity parameter record: FSCP_Authenticity_1 = 2, FSCP_Authenticity_2 = 2, FSP_Port = 1, FSP_AuthentCRC = 26664
Post condition	–

TEST CASE RESULTS	CHECK / REACTION
Evaluation	1) Check Port state 2) Check Events
Test passed	Port state is “OPERATE”, and Event 0xB003 received
Test failed (examples)	Any check incorrect
Report	Port state OPERATE: <negative/positive> <ok | nok> Event 0xB003 received: <yes/no> <ok | nok>

8.2.8 Unexpected authenticity 2 ("armed")

Table 44 defines the test conditions for this test case. It checks whether an FS-Device refuses to start SCL communication in case of VerifyRecord with unexpected authenticity 2 in "armed" mode (operation not monitored). This corresponds to the use case of a misconnected FS-Device to a correct Port but to an incorrect FS-Master. In this case an Event shall be raised.

Table 44 – Unexpected authenticity 2 ("armed")

TEST CASE ATTRIBUTES	IDENTIFICATION / REFERENCE
Identification (ID)	SDCI_FSTC_0042
Name	FSTCD_PARM_VRFY_AUTH2WRONG
Purpose (short)	Unexpected authenticity 2 ("armed")
Equipment under test (EUT)	FS-Device
Test case version	1.0
Category / type	FS-Device PREOPERATE test: test-to-fail
Specification (clause)	[3] clause 10.4.1, clause 10.4.3.1, clause 11.7.6, clause G.1, clause B.1
Configuration / setup	FS-Device-Tester
TEST CASE	**CONDITIONS / PERFORMANCE**
Purpose (detailed)	Make sure that an FS Device is not going to start SCL communication (“armed”) when receiving VerifyRecord with unexpected AUTH2 parameter.
Precondition	EUT configured for armed operation *;see A) and B)* FSDT port config DEACTIVATED
Procedure	a) Set PortConfig with FSP_VerifyRecord with values of A) and C) e.g. via SMI_PortConfiguration using ArgBlock 0x8100 *;see field test parameter* b) Wait for Port state "OPERATE" e.g. via ArgBlock FSPortStatusList c) Evaluation 1) d) Evaluation 2)
Test parameter	A) FSP protocol parameter record: FSP_ProtVersion = defaultValue in IODD, FSP_ProtMode = defaultValue in IODD, FSP_Watchdog = defaultValue in IODD, FSP_IOStructCRC = defaultValue in IODD, FSP_TechParCRC = valid CRC signature *;responsibility of tester* FSP_ProtParCRC = valid CRC signature B) FSP authenticity parameter record: FSCP_Authenticity_1 = 1, FSCP_Authenticity_2 = 2, FSP_Port = 1, FSP_AuthentCRC = 11456 C) FSP authenticity parameter record: FSCP_Authenticity_1 = 1, FSCP_Authenticity_2 = 3, FSP_Port = 1, FSP_AuthentCRC = 24853
Post condition	–
TEST CASE RESULTS	**CHECK / REACTION**
Evaluation	1) Check Port state 2) Check Events
Test passed	Port state is “OPERATE”, and Event 0xB003 received
Test failed (examples)	Any check incorrect
Report	Port state OPERATE: <negative/positive> <ok | nok> Event 0xB003 received: <yes/no> <ok | nok>

8.2.9 Unexpected Port ("armed")

Table 45 defines the test conditions for this test case. It checks whether an FS-Device refuses to start SCL communication in case of VerifyRecord with unexpected Port in "armed" mode (operation not monitored). This corresponds to the use case of a misconnected FS-Device to an incorrect Port but to a correct FS-Master. In this case an Event shall be raised.

Table 45 – Unexpected Port ("armed")

TEST CASE ATTRIBUTES	IDENTIFICATION / REFERENCE
Identification (ID)	SDCI_FSTC_0043
Name	FSTCD_PARM_VRFY_PORTWRONG
Purpose (short)	Unexpected Port ("armed")
Equipment under test (EUT)	FS-Device
Test case version	1.0
Category / type	FS-Device PREOPERATE test: test-to-fail
Specification (clause)	[3] clause 10.4.1, clause 10.4.3.1, clause 11.7.6, clause G.1, clause B.1
Configuration / setup	FS-Device-Tester

TEST CASE	CONDITIONS / PERFORMANCE
Purpose (detailed)	Make sure that an FS Device is not going to start SCL communication (“armed”) when receiving VerifyRecord with unexpected authentication port parameter.
Precondition	EUT configured for armed operation *;see A) and B)* FSDT port config DEACTIVATED
Procedure	a) Set PortConfig with FSP_VerifyRecord with values of A) and C) e.g. via SMI_PortConfiguration using ArgBlock 0x8100 *;see field test parameter* b) Wait for Port state "OPERATE" e.g. via ArgBlock FSPortStatusList c) Evaluation 1) d) Evaluation 2)
Test parameter	A) FSP protocol parameter record: FSP_ProtVersion = defaultValue in IODD, FSP_ProtMode = defaultValue in IODD, FSP_Watchdog = defaultValue in IODD, FSP_IOStructCRC = defaultValue in IODD, FSP_TechParCRC = valid CRC signature *;responsibility of tester* FSP_ProtParCRC = valid CRC signature B) FSP authenticity parameter record: FSCP_Authenticity_1 = 1, FSCP_Authenticity_2 = 2, FSP_Port = 1, FSP_AuthentCRC = 11456 C) FSP authenticity parameter record: FSCP_Authenticity_1 = 1, FSCP_Authenticity_2 = 2, FSP_Port = 2, FSP_AuthentCRC = 65341
Post condition	–

TEST CASE RESULTS	CHECK / REACTION
Evaluation	1) Check Port state 2) Check Events
Test passed	Port state is “OPERATE”, and Event 0xB004 received
Test failed (examples)	Any check incorrect
Report	Port state OPERATE: <negative/positive> <ok | nok> Event 0xB004 received: <yes/no> <ok | nok>

8.2.10 Incorrect authenticity CRC signature ("armed")

Table 46 defines the test conditions for this test case. It checks whether an FS-Device refuses to start SCL communication in case of VerifyRecord with incorrect authenticity CRC signature in "armed" mode (operation not monitored). In this case an Event shall be raised.

Table 46 – Incorrect authenticity CRC signature ("armed")

TEST CASE ATTRIBUTES	IDENTIFICATION / REFERENCE
Identification (ID)	SDCI_FSTC_0044
Name	FSTCD_PARM_VRFY_AUTHCRCWRG
Purpose (short)	Incorrect authenticity CRC signature ("armed")
Equipment under test (EUT)	FS-Device
Test case version	1.0
Category / type	FS-Device PREOPERATE test: test-to-fail
Specification (clause)	[3] clause 10.4.1, clause 10.4.3.1, clause 11.7.6, clause G.1, clause B.1
Configuration / setup	FS-Device-Tester

TEST CASE	CONDITIONS / PERFORMANCE
Purpose (detailed)	Make sure that an FS Device is not going to start SCL communication (“armed”) when receiving VerifyRecord with incorrect FSP_AuthentCRC parameter.
Precondition	EUT configured for armed operation *;see A) and B)* FSDT Port config DEACTIVATED
Procedure	a) Set PortConfig with FSP_VerifyRecord with values of A) and C) e.g. via SMI_PortConfiguration using ArgBlock 0x8100 *;see field test parameter* b) Wait for Port state "OPERATE" e.g. via ArgBlock FSPortStatusList c) Evaluation 1) d) Evaluation 2)
Test parameter	A) FSP protocol parameter record: FSP_ProtVersion = defaultValue in IODD, FSP_ProtMode = defaultValue in IODD, FSP_Watchdog = defaultValue in IODD, FSP_IOStructCRC = defaultValue in IODD, FSP_TechParCRC = valid CRC signature *;responsibility of tester* FSP_ProtParCRC = valid CRC signature B) FSP authenticity parameter record: FSCP_Authenticity_1 = 1, FSCP_Authenticity_2 = 2, FSP_Port = 1, FSP_AuthentCRC = 11456 C) FSP authenticity parameter record: FSCP_Authenticity_1 = 1, FSCP_Authenticity_2 = 2, FSP_Port = 1, FSP_AuthentCRC = 11457
Post condition	–

TEST CASE RESULTS	CHECK / REACTION
Evaluation	1) Check Port state 2) Check Events
Test passed	Port state is “OPERATE”, and Event 0xB005 received
Test failed (examples)	Any check incorrect
Report	Port state OPERATE: <negative/positive> <ok | nok> Event 0xB005 received: <yes/no> <ok | nok>

8.2.11 Incorrect protocol parameter CRC signature ("armed")

Table 46 defines the test conditions for this test case. It checks whether an FS-Device refuses to start SCL communication in case of VerifyRecord with incorrect protocol parameter CRC signature in "armed" mode (operation not monitored). In this case an Event shall be raised.

Table 47 – Incorrect protocol parameter CRC signature ("armed")

TEST CASE ATTRIBUTES	IDENTIFICATION / REFERENCE
Identification (ID)	SDCI_FSTC_0045
Name	FSTCD_PARM_VRFY_PPARCRCWRG
Purpose (short)	Incorrect protocol parameter CRC signature ("armed")
Equipment under test (EUT)	FS-Device
Test case version	1.0
Category / type	FS-Device PREOPERATE test: test-to-fail
Specification (clause)	[3] clause 10.4.1, clause 10.4.3.1, clause 11.7.6, clause G.1, clause B.1
Configuration / setup	FS-Device-Tester

TEST CASE	CONDITIONS / PERFORMANCE
Purpose (detailed)	Make sure that an FS Device is not going to start SCL communication (“armed”) when receiving VerifyRecord with incorrect FSP_ProtParCRC parameter.
Precondition	EUT configured for armed operation *;see A) and B)* FSDT Port config DEACTIVATED
Procedure	a) Set PortConfig with FSP_VerifyRecord with values of C) and B) e.g. via SMI_PortConfiguration using ArgBlock 0x8100 *;see field test parameter* b) Wait for Port state "OPERATE" e.g. via ArgBlock FSPortStatusList c) Evaluation 1) d) Evaluation 2)
Test parameter	A) FSP protocol parameter record: FSP_ProtVersion = defaultValue in IODD, FSP_ProtMode = defaultValue in IODD, FSP_Watchdog = defaultValue in IODD, FSP_IOStructCRC = defaultValue in IODD, FSP_TechParCRC = valid CRC signature *;responsibility of tester* FSP_ProtParCRC = valid CRC signature B) FSP authenticity parameter record: FSCP_Authenticity_1 = 1, FSCP_Authenticity_2 = 2, FSP_Port = 1, FSP_AuthentCRC = 11456 C) FSP protocol parameter record: FSP_ProtVersion = defaultValue in IODD, FSP_ProtMode = defaultValue in IODD, FSP_Watchdog = defaultValue in IODD, FSP_IOStructCRC = defaultValue in IODD, *;responsibility of tester* FSP_TechParCRC = valid CRC signature, FSP_ProtParCRC = valid CRC signature + 1 *;responsibility of tester*
Post condition	–

TEST CASE RESULTS	CHECK / REACTION
Evaluation	1) Check Port state 2) Check Events
Test passed	Port state is “OPERATE”, and Event 0xB006 received
Test failed (examples)	Any check incorrect
Report	Port state OPERATE: <negative/positive> <ok | nok> Event 0xB006 received: <yes/no> <ok | nok>

8.2.12 Incorrect technology parameter CRC signature ("armed")

Table 46 defines the test conditions for this test case. It checks whether an FS-Device refuses to start SCL communication in case of VerifyRecord with incorrect technology parameter CRC signature in "armed" mode (operation not monitored). In this case an Event shall be raised.

Table 48 – Incorrect technology parameter CRC signature ("armed")

TEST CASE ATTRIBUTES	IDENTIFICATION / REFERENCE
Identification (ID)	SDCI_FSTC_0046
Name	FSTCD_PARM_VRFY_TPARCRCWRG
Purpose (short)	Incorrect technology parameter CRC signature ("armed")
Equipment under test (EUT)	FS-Device
Test case version	1.0
Category / type	FS-Device PREOPERATE test: test-to-fail
Specification (clause)	[3] clause 10.4.1, clause 10.4.3.1, clause 11.7.6, clause G.1, clause B.1
Configuration / setup	FS-Device-Tester

TEST CASE	CONDITIONS / PERFORMANCE
Purpose (detailed)	Make sure that an FS Device is not going to start SCL communication (“armed”) when receiving VerifyRecord with incorrect FSP_TechParCRC parameter.
Precondition	EUT configured for armed operation *;see A) and B)* FSDT Port config DEACTIVATED
Procedure	a) Set PortConfig with FSP_VerifyRecord with values of C) and B) e.g. via SMI_PortConfiguration using ArgBlock 0x8100 *;see field test parameter* b) Wait for Port state "OPERATE" e.g. via ArgBlock FSPortStatusList c) Evaluation 1) d) Evaluation 2)
Test parameter	A) FSP protocol parameter record: FSP_ProtVersion = defaultValue in IODD, FSP_ProtMode = defaultValue in IODD, FSP_Watchdog = defaultValue in IODD, FSP_IOStructCRC = defaultValue in IODD, FSP_TechParCRC = valid CRC signature *;responsibility of tester* FSP_ProtParCRC = valid CRC signature B) FSP authenticity parameter record: FSCP_Authenticity_1 = 1, FSCP_Authenticity_2 = 2, FSP_Port = 1, FSP_AuthentCRC = 11456 C) FSP protocol parameter record: FSP_ProtVersion = defaultValue in IODD, FSP_ProtMode = defaultValue in IODD, FSP_Watchdog = defaultValue in IODD, FSP_IOStructCRC = defaultValue in IODD, *;responsibility of tester* FSP_TechParCRC = 0, FSP_ProtParCRC = valid CRC signature *;responsibility of tester*
Post condition	–

TEST CASE RESULTS	CHECK / REACTION
Evaluation	1) Check Port state 2) Check Events
Test passed	Port state is “OPERATE”, and Event 0xB007 received
Test failed (examples)	Any check incorrect
Report	Port state OPERATE: <negative/positive> <ok | nok> Event 0xB007 received: <yes/no> <ok | nok>

8.2.13 Incorrect IO structure CRC signature ("armed")

Table 49 defines the test conditions for this test case. It checks whether an FS-Device refuses to start SCL communication in case of VerifyRecord with incorrect technology parameter CRC signature in "armed" mode (operation not monitored). In this case an Event shall be raised.

Table 49 – Incorrect IO structure CRC signature ("armed")

TEST CASE ATTRIBUTES	IDENTIFICATION / REFERENCE
Identification (ID)	SDCI_FSTC_0047
Name	FSTCD_PARM_VRFY_IOSTCRCWRG
Purpose (short)	Incorrect IO structure CRC signature ("armed")
Equipment under test (EUT)	FS-Device
Test case version	1.0
Category / type	FS-Device PREOPERATE test: test-to-fail
Specification (clause)	[3] clause 10.4.1, clause 10.4.3.1, clause 11.7.6, clause G.1, clause B.1
Configuration / setup	FS-Device-Tester

TEST CASE	CONDITIONS / PERFORMANCE
Purpose (detailed)	Make sure that an FS Device is not going to start SCL communication (“armed”) when receiving VerifyRecord with incorrect FSP_IOStructCRC parameter.
Precondition	EUT configured for armed operation *;see A) and B)* FSDT Port config DEACTIVATED
Procedure	a) Set PortConfig with FSP_VerifyRecord with values of C) and B) e.g. via SMI_PortConfiguration using ArgBlock 0x8100 *;see field test parameter* b) Wait for Port state "OPERATE" e.g. via ArgBlock FSPortStatusList c) Evaluation 1) d) Evaluation 2)
Test parameter	A) FSP protocol parameter record: FSP_ProtVersion = defaultValue in IODD, FSP_ProtMode = defaultValue in IODD, FSP_Watchdog = defaultValue in IODD, FSP_IOStructCRC = defaultValue in IODD, FSP_TechParCRC = valid CRC signature, *;responsibility of tester* FSP_ProtParCRC = valid CRC signature B) FSP authenticity parameter record: FSCP_Authenticity_1 = 1, FSCP_Authenticity_2 = 2, FSP_Port = 1, FSP_AuthentCRC = 11456 C) FSP protocol parameter record: FSP_ProtVersion = defaultValue in IODD, FSP_ProtMode = defaultValue in IODD, FSP_Watchdog = defaultValue in IODD, FSP_IOStructCRC = defaultValue in IODD + 1, *;responsibility of tester* FSP_TechParCRC = valid CRC signature, FSP_ProtParCRC = valid CRC signature *;responsibility of tester*
Post condition	–

TEST CASE RESULTS	CHECK / REACTION
Evaluation	1) Check Port state 2) Check Events
Test passed	Port state is “OPERATE”, and Event 0xB008 received
Test failed (examples)	Any check incorrect
Report	Port state OPERATE: <negative/positive> <ok | nok> Event 0xB008 received: <yes/no> <ok | nok>

8.2.14 Invalid watchdog time ("armed")

Table 50 defines the test conditions for this test case. It checks whether an FS-Device refuses to start SCL communication in case of VerifyRecord with invalid watchdog time in "armed" mode (operation not monitored). In this case an Event shall be raised.

Table 50 – Invalid watchdog time ("armed")

TEST CASE ATTRIBUTES	IDENTIFICATION / REFERENCE
Identification (ID)	SDCI_FSTC_0048
Name	FSTCD_PARM_VRFY_WDTIMEINVL
Purpose (short)	Invalid watchdog time ("armed")
Equipment under test (EUT)	FS-Device
Test case version	1.0
Category / type	FS-Device PREOPERATE test: test-to-fail
Specification (clause)	[3] clause 10.4.1, clause 10.4.3.1, clause 11.7.6, clause G.1, clause B.1, A.2.6
Configuration / setup	FS-Device-Tester
TEST CASE	**CONDITIONS / PERFORMANCE**
Purpose (detailed)	Make sure that an FS Device is not going to start SCL communication (“armed”) when receiving VerifyRecord with invalid "WD timeout" value.
Precondition	EUT configured for armed operation *;see A) and B)* FSDT Port config DEACTIVATED
Procedure	a) Set PortConfig with FSP_VerifyRecord with values of C) and B) e.g. via SMI_PortConfiguration using ArgBlock 0x8100 *;see field test parameter* b) Wait for Port state "OPERATE" e.g. via ArgBlock FSPortStatusList c) Evaluation 1) d) Evaluation 2)
Test parameter	A) FSP protocol parameter record: FSP_ProtVersion = defaultValue in IODD, FSP_ProtMode = defaultValue in IODD, FSP_Watchdog = defaultValue in IODD, FSP_IOStructCRC = defaultValue in IODD, FSP_TechParCRC = valid CRC signature *;responsibility of tester* FSP_ProtParCRC = valid CRC signature B) FSP authenticity parameter record: FSCP_Authenticity_1 = 1, FSCP_Authenticity_2 = 2, FSP_Port = 1, FSP_AuthentCRC = 11456 C) FSP protocol parameter record: FSP_ProtVersion = defaultValue in IODD, FSP_ProtMode = defaultValue in IODD, FSP_Watchdog = 0, FSP_IOStructCRC = defaultValue in IODD, *;responsibility of tester* FSP_TechParCRC = valid CRC signature, FSP_ProtParCRC = valid CRC signature *;responsibility of tester*
Post condition	–
TEST CASE RESULTS	**CHECK / REACTION**
Evaluation	1) Check Port state 2) Check Events
Test passed	Port state is “OPERATE”, and Event 0xB009 received
Test failed (examples)	Any check incorrect
Report	Port state OPERATE: <negative/positive> <ok | nok> Event 0xB009 received: <yes/no> <ok | nok>

8.2.15 Invalid protocol version ("armed")

Table 51 defines the test conditions for this test case. It checks whether an FS-Device refuses to start SCL communication in case of VerifyRecord with incorrect protocol version in "armed" mode (operation not monitored). In this case no Event shall be raised.

Table 51 – Invalid protocol version ("armed")

TEST CASE ATTRIBUTES	IDENTIFICATION / REFERENCE
Identification (ID)	SDCI_FSTC_0049
Name	FSTCD_PARM_VRFY_PVERSINVL
Purpose (short)	Invalid protocol version ("armed")
Equipment under test (EUT)	FS-Device
Test case version	1.0
Category / type	FS-Device PREOPERATE test: test-to fail
Specification (clause)	[3] clause 10.4.1, clause 10.4.3.1, clause 11.7.6, clause G.1
Configuration / setup	FS-Device-Tester

TEST CASE	CONDITIONS / PERFORMANCE
Purpose (detailed)	Make sure that an FS Device is not going to start SCL communication (“armed”) when receiving VerifyRecord with invalid protocol version parameter.
Precondition	EUT configured for armed operation *;see A) and B)* FSDT Port config DEACTIVATED
Procedure	a) Set PortConfig with FSP_VerifyRecord with values of C) and B) e.g. via SMI_PortConfiguration using ArgBlock 0x8100 *;see field test parameter* b) Wait for Port state "OPERATE" e.g. via ArgBlock FSPortStatusList c) Evaluation 1)
Test parameter	A) FSP protocol parameter record: FSP_ProtVersion = defaultValue in IODD, FSP_ProtMode = defaultValue in IODD, FSP_Watchdog = defaultValue in IODD, FSP_IOStructCRC = defaultValue in IODD, FSP_TechParCRC = valid CRC signature *;responsibility of tester* FSP_ProtParCRC = valid CRC signature B) FSP authenticity parameter record: FSCP_Authenticity_1 = 1, FSCP_Authenticity_2 = 2, FSP_Port = 1, FSP_AuthentCRC = 11456 C) FSP protocol parameter record: FSP_ProtVersion = defaultValue in IODD + 1, FSP_ProtMode = defaultValue in IODD, FSP_Watchdog = defaultValue in IODD, FSP_IOStructCRC = defaultValue in IODD, *;responsibility of tester* FSP_TechParCRC = valid CRC signature, FSP_ProtParCRC = valid CRC signature *;responsibility of tester*
Post condition	–

TEST CASE RESULTS	CHECK / REACTION
Evaluation	1) Check Port state
Test passed	Port state is “OPERATE”
Test failed (examples)	Any check incorrect
Report	Port state OPERATE: <negative/positive> <ok | nok>

8.2.16 Invalid protocol mode ("armed")

Table 52 defines the test conditions for this test case. It checks whether an FS-Device refuses to start SCL communication in case of VerifyRecord with incorrect protocol mode in "armed" mode (operation not monitored). In this case no Event shall be raised.

Table 52 – Invalid protocol mode ("armed")

TEST CASE ATTRIBUTES	IDENTIFICATION / REFERENCE
Identification (ID)	SDCI_FSTC_0050
Name	FSTCD_PARM_VRFY_PMODEINVL
Purpose (short)	Invalid protocol mode ("armed")
Equipment under test (EUT)	FS-Device
Test case version	1.0
Category / type	FS-Device PREOPERATE test: test-to-fail
Specification (clause)	[3] clause 10.4.1, clause 10.4.3.1, clause 11.7.6, clause G.1
Configuration / setup	FS-Device-Tester

TEST CASE	CONDITIONS / PERFORMANCE
Purpose (detailed)	Make sure that an FS Device is not going to start SCL communication (“armed”) when receiving VerifyRecord with invalid protocol mode parameter.
Precondition	EUT configured for armed operation *;see A) and B)* FSDT Port config DEACTIVATED
Procedure	a) Set PortConfig with FSP_VerifyRecord with values of C) and B) e.g. via SMI_PortConfiguration using ArgBlock 0x8100 *;see field test parameter* b) Wait for Port state "OPERATE" e.g. via ArgBlock FSPortStatusList c) Evaluation 1)
Test parameter	A) FSP protocol parameter record: FSP_ProtVersion = defaultValue in IODD, FSP_ProtMode = defaultValue in IODD, FSP_Watchdog = defaultValue in IODD, FSP_IOStructCRC = defaultValue in IODD, FSP_TechParCRC = valid CRC signature *;responsibility of tester* FSP_ProtParCRC = valid CRC signature B) FSP authenticity parameter record: FSCP_Authenticity_1 = 1, FSCP_Authenticity_2 = 2, FSP_Port = 1, FSP_AuthentCRC = 11456 C) FSP protocol parameter record: FSP_ProtVersion = defaultValue in IODD + 1, FSP_ProtMode = 10, FSP_Watchdog = defaultValue in IODD, FSP_IOStructCRC = defaultValue in IODD, *;responsibility of tester* FSP_TechParCRC = valid CRC signature, FSP_ProtParCRC = valid CRC signature *;responsibility of tester*
Post condition	–

TEST CASE RESULTS	CHECK / REACTION
Evaluation	1) Check Port state
Test passed	Port state is “OPERATE”
Test failed (examples)	Any check incorrect
Report	Port state OPERATE: <negative/positive> <ok | nok>

8.3 Special SCL tests

8.3.1 Principle of FS-Device watchdog timer test

In 13.6.1, the general concepts on worst-case delay times (WCDT) and one fault delay times (OFDT) as well as watchdog timer testing for FS-Master are explained. The test case for FS-Devices follows a similar concept.

Figure 11 illustrates, how the watchdog timer of an FS-Device is tested. The FS-Device Tester controls the FS-Device in such a way that the FS-Master SPDU ("MCount = 4") is delayed through artificial repetitions. For details see 8.3.2.

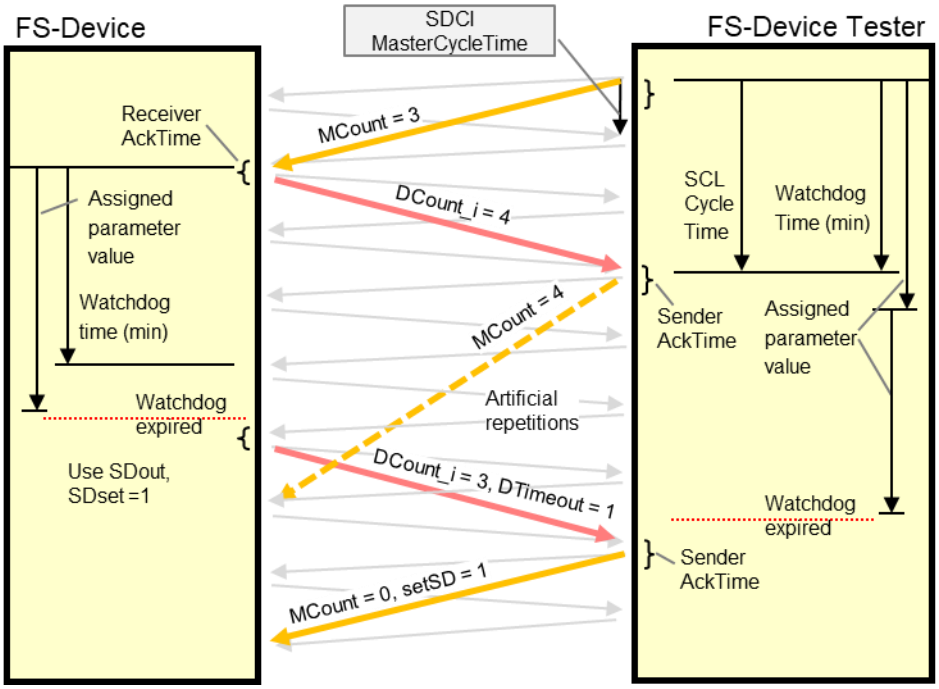

Figure 11 – Principle of FS-Device watchdog timer test

Usually, the SCL software is triggered by the IO-Link communication, which is determined by the Master cycle time. Thus, the reaction of the SCL on expiration of the watchdog depends on how the SCL software samples the IO-Link messages with SPDU as shown in Figure 12.

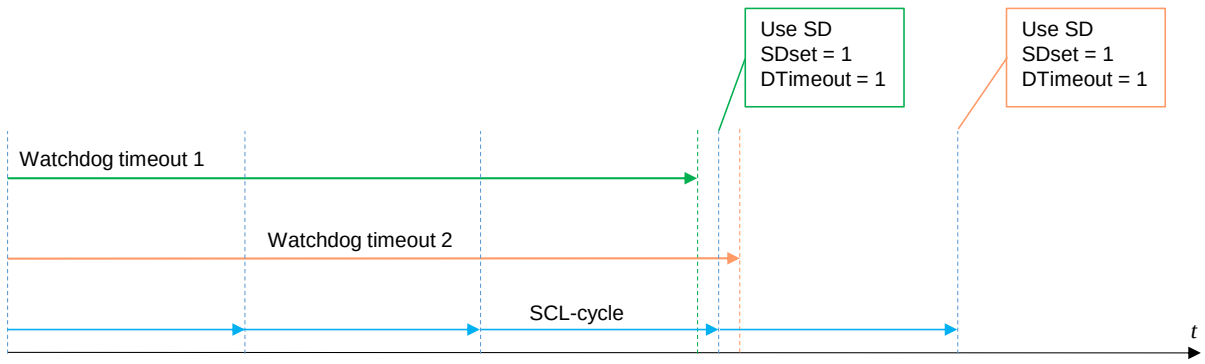

Figure 12 – Influence of SCL sampling effects

In best case, the expiration of the watchdog coincides with the sampling. In worst case, the expiration is just behind sampling, and the safety reaction is delayed correspondingly.

It is highly recommended for the designer of an FS-Device to choose the defaultValue of the parameter FSP_Watchdog in IODD such that one extra SCL cycle time is included.

8.3.2 FS-Device watchdog timer test

Table 53 defines the test conditions for this test case. The base protocol watchdog function of the SCL is tested in 9.2.

Table 53 – FS-Device watchdog timer test

TEST CASE ATTRIBUTES	IDENTIFICATION / REFERENCE
Identification (ID)	SDCI_FSTC_0051
Name	FSTCD_SCLD_WATCHDOGANDIODD
Purpose (short)	Check whether FS-Device watchdog timeout coincides with IODD value
Equipment under test (EUT)	FS-Device and IODD
Test case version	1.1
Category / type	FS-Device test, test-to-pass
Specification (clause)	[3]
Configuration / setup	FS-Device-Tester

TEST CASE	CONDITIONS / PERFORMANCE
Purpose (detailed)	Check whether FS-Device's safety reaction time upon watchdog timeout coincides with the FSP_Watchdog value in the IODD (see also 13.6.2).
Precondition	EUT: Configured for armed operation ;*see field test parameter* FSDT: Port config DEACTIVATED FS Device SCL cycle time t_scl,d, SCL cycle time of Master = t_scl,m = 0
Procedure	a) Set PortConfig with FSP_VerifyRecord values of A) and B) ;*see field test parameter* b) Wait for Port state "OPERATE" c) delay the generation of SPDU in the FSDTU with the maximum number of cycles not exceeding the time t_lp ;*see field test parameter* d) Line monitor to measure timeouts for 1 min (Status Bit0 = 0, DTimeout) e) Evaluation 1) f) delay the generation of SPDU in the FSDTU with the minimum number of cycles exceeding the time t_sf. ;*see field test parameter* g) Line monitor to measure timeouts for 1 min (Status Bit0 = 0, DTimeout), break if a timeout has occurred h) Evaluation 2)
Test parameter	A) FSP protocol parameter record: FSP_ProtVersion = defaultValue in IODD, FSP_ProtMode = defaultValue in IODD, FSP_Watchdog (t_wd) = min cycle time from IODD * 100 t_ct = Master cycle time which is used during test $t_{lp} = 0.9\, t_{wd} - 2t_{ct} - t_{scl,d}$ $t_{sf} = 1.1 + 2t_{ct} + t_{scl,d}$ FSP_IOStructCRC = defaultValue in IODD, FSP_TechParCRC = valid CRC signature ;*responsibility of tester* FSP_ProtParCRC = valid CRC signature ;*responsibility of tester* B) FSP authenticity parameter record: FSCP_Authenticity_1 = 1, FSCP_Authenticity_1 = 2, FSP_Port = 1, FSP_AuthentCRC = 11456
Post condition	–

TEST CASE RESULTS	CHECK / REACTION
Evaluation	1) Check timeouts 2) Check timeouts
Test passed	No timeout occurred in 1) At least 1 timeout occurred in 2)
Test failed (examples)	If a timeout occurred in 1) or no timeout occurred in 2)

TEST CASE RESULTS	CHECK / REACTION	
Report	Watchdog within limits	<ok | not ok>

8.3.3 Watchdog retrigger and CRC exception (0 → 1)

8.3.1 defines the conditions for this test case. Some critical safety features cannot be tested by IO-Link on-board equipment and shall be assessed during the development process via verification and validation activities according to appropriate clauses in IEC 61508-3 as also mentioned in 13.6.1.

Manufacturer to prove that the SCL watchdog timer is only retriggered when MCount has been incremented and a calculated SPDU CRC signature of "0" will be changed to "1".

9 FS-Device safety communication layer tests

9.1 Interface for the FS-Device SCL test scripts

The test scripts for the automated safety layer test are encoded as XML files. Each and every test script ("FSDeviceSclTestCaseSteps") consists of test step instructions as described in Table 54. The XML Schema of the interface parameters for the FS-Device automated safety layer test is illustrated in Figure 13. It is similar to the XML format of the message types for the FS-Master (see 12.1).

However, the test scripts for the FS-Device do not contain test data for the "technology" interface. An upper tester is not intended for the FS-Device test. During the execution of the test scripts, the "technology" data has always its configured initial value.

NOTE The general concept of SCL protocol conformance testing is described in A.2.2. The automated safety layer tester for FS-Devices is described in A.2.4.

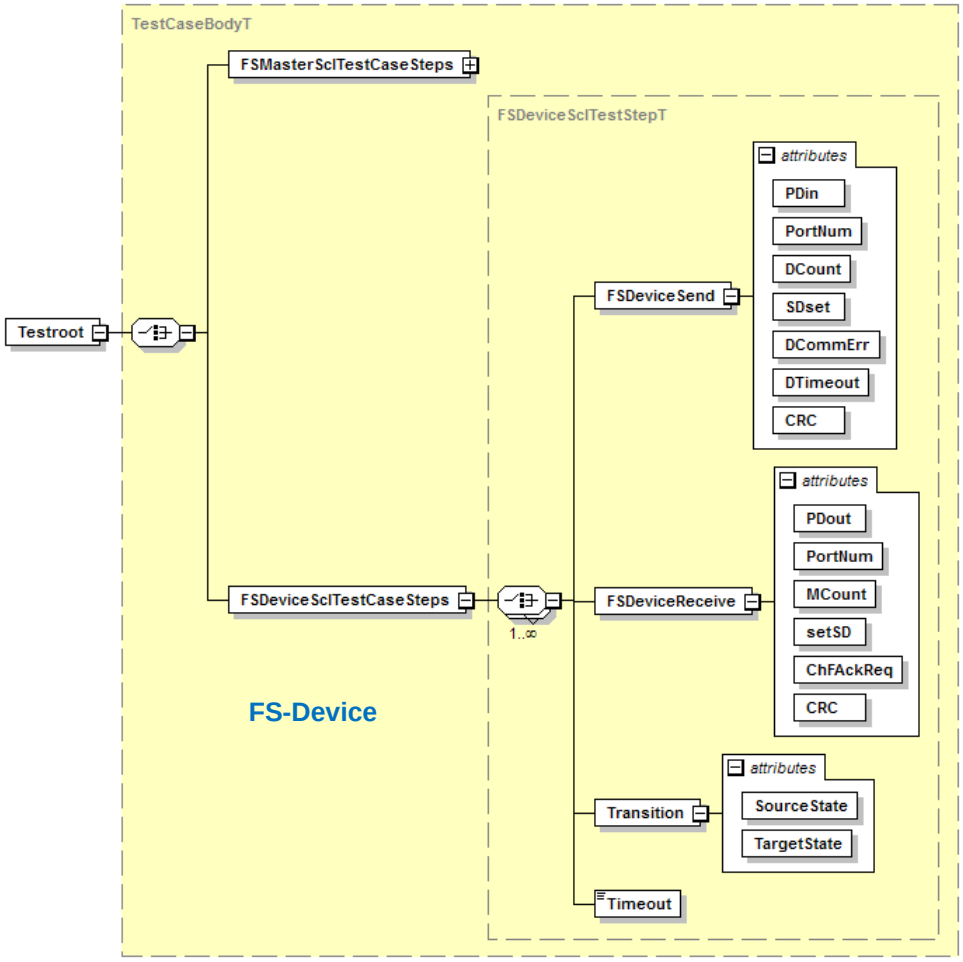

Figure 13 – Schema of steps and parameters/attributes

Table 54 defines the FS-Device interface parameters.

Table 54 – FS-Device interface parameters

Test step instructions	Parameter	Value range
FSDeviceSend (FS-Device → Test System)	PDin	SD –Test System expects SD values (= 0) PD – Test System expects PD values (> 0)
	PortNum	valid –Test System expects configured port number
	DCount	0 to 7
	SDset	0, 1

Test step instructions	Parameter	Value range
	DCommErr	0, 1
	DTimeout	0, 1
	CRC	valid – Test System expects correct CRC-Signature
FSDeviceReceive (Test System → FS-Device)	PDout	PD – Test System sends PD values (> 0)
	PortNum	valid – Test System sends configured port number invalid – Test System sends not configured port number
	MCount	0 to 7
	setSD	0, 1
	ChFAckReq	0, 1
	CRC	valid – Test System sends correct CRC-Signature invalid – Test System sends incorrect CRC-Signature
Timeout (Test System → FS-Device)		Test System sends no new message within a time delay ≥ DTime. See for example 9.2.3.
Transition (Tag)	SourceState	This parameter is informative and will be inserted only in test logging from test system
	TargetState	This parameter is informative and will be inserted only in test logging from test system

The test step instructions comprise test messages from and to the FS-Device, Timeout, and Transition tags.

Test messages sent by the FS-Device test object (EUT) are specified with the message type "FSDeviceSend". The test message type "FSDeviceReceive" describes test messages that are received by the FS-Device in a test scenario. Both messages are defining test data that are received from or sent to the IO-Link communication Port.

The test step instruction "Timeout" specifies for how long the test system shall not send a response. This time shall be greater than the watchdog time of the EUT (DTime).

The XML tag "Transition" is used for traceability of test messages with respect to the expected transition of the state machine specified in [3]. This information is only descriptive and has no impact on the test flow of the test tool.

9.2 FS-Device SCL test suite

9.2.1 Test script 1

Table 55 defines the test conditions for this test case. The associated XML file contains steps and message parameters for the state flow check in case of no error, MCount = 1, and Timeout.

Table 55 – FS-Device test script 1

TEST CASE ATTRIBUTES	IDENTIFICATION / REFERENCE
Identification (ID)	SDCI_FSTC_0052
Name	FSTCD_SCLD_FLOW_NOERRMC1TO
Purpose (short)	
Equipment under test (EUT)	FS-Device
Test case version	1.0
Category / type	FS-Device automated SCL protocol test
Specification (clause)	[4] clause 11.3.3, Figure 37 (services); clause 11.5.3, Figure 42 (state chart)
Configuration / setup	See Table 54
TEST CASE	**CONDITIONS / PERFORMANCE**
Purpose (detailed)	Protocol flow in case of distinct error
Precondition	FS-Device waiting for the first message
Procedure	See XML file "IO-Link-Safety_spec_device_final_testsuite_testcase_1.xml"
Test parameter	See Table 54 and XML file
Post condition	–
TEST CASE RESULTS	**CHECK / REACTION**
Evaluation	Comparison of expected and received values according to the XML file
Test passed	Comparison OK
Test failed (examples)	Comparison not OK
Report	Printout of the automated SCL protocol tester <pass/fail>

Content of file "IO-Link-Safety_spec_device_final_testsuite_testcase_1.xml":


```xml
<?xml version="1.0" encoding="UTF-8"?>
<Testroot xsi:noNamespaceSchemaLocation="IO-Link-Safety-Test-Procedure_Types_V1.0.xsd"
xmlns:xsi="http://www.w3.org/2001/XMLSchema-instance" version="1.2" name="tc_1" date="20.11.2018: 14:01:13.942">
  <FSDeviceSclTestCaseSteps>
    <Transition SourceState="Init" TargetState="SystemStart_20"/>
    <Transition SourceState="SystemStart_20" TargetState="WaitOnSPDU_21"/>
    <FSDeviceReceive PDout="PD" PortNum="valid" MCount="1" setSD="0" ChFAckReq="0" CRC="valid"/>
    <Transition SourceState="WaitOnSPDU_21" TargetState="CheckSPDU_22"/>
    <Transition SourceState="CheckSPDU_22" TargetState="PrepareResponse_25"/>
    <Transition SourceState="PrepareResponse_25" TargetState="WaitOnSPDU_26"/>
    <FSDeviceSend PDin="PD" PortNum="valid" DCount="6" SDset="1" DCommErr="1" DTimeout="1" CRC="valid"/>
    <FSDeviceReceive PDout="PD" PortNum="valid" MCount="2" setSD="0" ChFAckReq="0" CRC="valid"/>
    <Transition SourceState="WaitOnSPDU_26" TargetState="CheckSPDU_27"/>
    <Transition SourceState="CheckSPDU_27" TargetState="PrepareResponse_25"/>
    <Transition SourceState="PrepareResponse_25" TargetState="WaitOnSPDU_26"/>
    <FSDeviceSend PDin="PD" PortNum="valid" DCount="5" SDset="1" DCommErr="1" DTimeout="0" CRC="valid"/>
    <FSDeviceReceive PDout="PD" PortNum="valid" MCount="3" setSD="0" ChFAckReq="0" CRC="valid"/>
    <Transition SourceState="WaitOnSPDU_26" TargetState="CheckSPDU_27"/>
    <Transition SourceState="CheckSPDU_27" TargetState="PrepareResponse_25"/>
    <Transition SourceState="PrepareResponse_25" TargetState="WaitOnSPDU_26"/>
    <FSDeviceSend PDin="PD" PortNum="valid" DCount="4" SDset="1" DCommErr="0" DTimeout="0" CRC="valid"/>
    <FSDeviceReceive PDout="PD" PortNum="valid" MCount="4" setSD="0" ChFAckReq="0" CRC="valid"/>
    <Transition SourceState="WaitOnSPDU_26" TargetState="CheckSPDU_27"/>
    <Transition SourceState="CheckSPDU_27" TargetState="PrepareResponse_25"/>
    <Transition SourceState="PrepareResponse_25" TargetState="WaitOnSPDU_26"/>
    <FSDeviceSend PDin="PD" PortNum="valid" DCount="3" SDset="1" DCommErr="0" DTimeout="0" CRC="valid"/>
    <FSDeviceReceive PDout="PD" PortNum="valid" MCount="5" setSD="0" ChFAckReq="0" CRC="valid"/>
```

```
    <Transition SourceState="WaitOnSPDU_26" TargetState="CheckSPDU_27"/>
    <Transition SourceState="CheckSPDU_27" TargetState="PrepareResponse_23"/>
    <Transition SourceState="PrepareResponse_23" TargetState="WaitOnSPDU_24"/>
    <FSDeviceSend PDin="PD" PortNum="valid" DCount="2" SDset="0" DCommErr="0" DTimeout="0" CRC="valid"/>
    <FSDeviceReceive PDout="PD" PortNum="valid" MCount="6" setSD="1" ChFAckReq="0" CRC="valid"/>
    <Transition SourceState="WaitOnSPDU_24" TargetState="CheckSPDU_22"/>
    <Transition SourceState="CheckSPDU_22" TargetState="PrepareResponse_23"/>
    <Transition SourceState="PrepareResponse_23" TargetState="WaitOnSPDU_24"/>
    <FSDeviceSend PDin="PD" PortNum="valid" DCount="1" SDset="0" DCommErr="0" DTimeout="0" CRC="valid"/>
    <FSDeviceReceive PDout="PD" PortNum="valid" MCount="2" setSD="0" ChFAckReq="0" CRC="valid"/>
    <Transition SourceState="WaitOnSPDU_24" TargetState="CheckSPDU_22"/>
    <Transition SourceState="CheckSPDU_22" TargetState="PrepareResponse_25"/>
    <Transition SourceState="PrepareResponse_25" TargetState="WaitOnSPDU_26"/>
    <FSDeviceSend PDin="PD" PortNum="valid" DCount="5" SDset="1" DCommErr="1" DTimeout="0" CRC="valid"/>
  </FSDeviceSclTestCaseSteps>
</Testroot>
```

9.2.2 Test script 2

Table 56 defines the test conditions for this test case. The associated XML file contains steps and message parameters for the state flow check in case of a setSD error and MCount = 0.

Table 56 – FS-Device test script 2

TEST CASE ATTRIBUTES	IDENTIFICATION / REFERENCE
Identification (ID)	SDCI_FSTC_0053
Name	FSTCD_SCLD_FLOW_SETSD1MC0
Purpose (short)	
Equipment under test (EUT)	FS-Device
Test case version	1.0
Category / type	FS-Device automated SCL protocol test
Specification (clause)	[3] clause 11.3.3, Figure 37 (services); clause 11.5.3, Figure 42 (state chart)
Configuration / setup	See Table 54
TEST CASE	**CONDITIONS / PERFORMANCE**
Purpose (detailed)	Protocol flow in case of distinct error
Precondition	FS-Device waiting for the first message
Procedure	See XML file "IO-Link-Safety_spec_device_final_testsuite_testcase_2.xml"
Test parameter	See Table 54 and XML file
Post condition	–
TEST CASE RESULTS	**CHECK / REACTION**
Evaluation	Comparison of expected and received values according to the XML file
Test passed	Comparison OK
Test failed (examples)	Comparison not OK
Report	Printout of the automated SCL protocol tester <pass/fail>

Content of file "IO-Link-Safety_spec_device_final_testsuite_testcase_2.xml":

```
<?xml version="1.0" encoding="UTF-8"?>
<Testroot xsi:noNamespaceSchemaLocation="IO-Link-Safety-Test-Procedure_Types_V1.0.xsd"
xmlns:xsi="http://www.w3.org/2001/XMLSchema-instance" version="1.2" name="tc_2" date="20.11.2018: 14:01:13.942">
  <FSDeviceSclTestCaseSteps>
    <Transition SourceState="Init" TargetState="SystemStart_20"/>
    <Transition SourceState="SystemStart_20" TargetState="WaitOnSPDU_21"/>
    <FSDeviceReceive PDout="PD" PortNum="valid" MCount="0" setSD="1" ChFAckReq="0" CRC="valid"/>
    <Transition SourceState="WaitOnSPDU_21" TargetState="CheckSPDU_22"/>
    <Transition SourceState="CheckSPDU_22" TargetState="PrepareResponse_23"/>
    <Transition SourceState="PrepareResponse_23" TargetState="WaitOnSPDU_24"/>
    <FSDeviceSend PDin="PD" PortNum="valid" DCount="7" SDset="1" DCommErr="0" DTimeout="0" CRC="valid"/>
    <FSDeviceReceive PDout="PD" PortNum="valid" MCount="1" setSD="0" ChFAckReq="0" CRC="valid"/>
    <Transition SourceState="WaitOnSPDU_24" TargetState="CheckSPDU_22"/>
    <Transition SourceState="CheckSPDU_22" TargetState="PrepareResponse_23"/>
    <Transition SourceState="PrepareResponse_23" TargetState="WaitOnSPDU_24"/>
    <FSDeviceSend PDin="PD" PortNum="valid" DCount="6" SDset="1" DCommErr="0" DTimeout="0" CRC="valid"/>
    <FSDeviceReceive PDout="PD" PortNum="valid" MCount="2" setSD="0" ChFAckReq="0" CRC="valid"/>
    <Transition SourceState="WaitOnSPDU_24" TargetState="CheckSPDU_22"/>
    <Transition SourceState="CheckSPDU_22" TargetState="PrepareResponse_23"/>
    <Transition SourceState="PrepareResponse_23" TargetState="WaitOnSPDU_24"/>
    <FSDeviceSend PDin="PD" PortNum="valid" DCount="5" SDset="1" DCommErr="0" DTimeout="0" CRC="valid"/>
    <FSDeviceReceive PDout="PD" PortNum="valid" MCount="3" setSD="0" ChFAckReq="0" CRC="valid"/>
    <Transition SourceState="WaitOnSPDU_24" TargetState="CheckSPDU_22"/>
    <Transition SourceState="CheckSPDU_22" TargetState="PrepareResponse_23"/>
    <Transition SourceState="PrepareResponse_23" TargetState="WaitOnSPDU_24"/>
    <FSDeviceSend PDin="PD" PortNum="valid" DCount="4" SDset="0" DCommErr="0" DTimeout="0" CRC="valid"/>
    <FSDeviceReceive PDout="PD" PortNum="valid" MCount="4" setSD="0" ChFAckReq="0" CRC="valid"/>
    <Transition SourceState="WaitOnSPDU_24" TargetState="CheckSPDU_22"/>
    <Transition SourceState="CheckSPDU_22" TargetState="PrepareResponse_23"/>
```

```
    <Transition SourceState="PrepareResponse_23" TargetState="WaitOnSPDU_24"/>
    <FSDeviceSend PDin="PD" PortNum="valid" DCount="3" SDset="0" DCommErr="0" DTimeout="0" CRC="valid"/>
    <FSDeviceReceive PDout="PD" PortNum="valid" MCount="5" setSD="0" ChFAckReq="0" CRC="valid"/>
    <Transition SourceState="WaitOnSPDU_24" TargetState="CheckSPDU_22"/>
    <Transition SourceState="CheckSPDU_22" TargetState="PrepareResponse_23"/>
    <Transition SourceState="PrepareResponse_23" TargetState="WaitOnSPDU_24"/>
    <FSDeviceSend PDin="PD" PortNum="valid" DCount="2" SDset="0" DCommErr="0" DTimeout="0" CRC="valid"/>
    <FSDeviceReceive PDout="PD" PortNum="valid" MCount="3" setSD="0" ChFAckReq="0" CRC="valid"/>
    <Transition SourceState="WaitOnSPDU_24" TargetState="CheckSPDU_22"/>
    <Transition SourceState="CheckSPDU_22" TargetState="PrepareResponse_25"/>
    <Transition SourceState="PrepareResponse_25" TargetState="WaitOnSPDU_26"/>
    <FSDeviceSend PDin="PD" PortNum="valid" DCount="4" SDset="1" DCommErr="1" DTimeout="0" CRC="valid"/>
  </FSDeviceSclTestCaseSteps>
</Testroot>
```

9.2.3 Test script 3

Table 57 defines the test conditions for this test case. The associated XML file contains steps and message parameters for the state flow check in case of no error, MCount = 5, and Timeout.

Table 57 – FS-Device test script 3

TEST CASE ATTRIBUTES	IDENTIFICATION / REFERENCE
Identification (ID)	SDCI_FSTC_0054
Name	FSTCD_SCLD_FLOW_ SETSD0MC5TO
Purpose (short)	
Equipment under test (EUT)	FS-Device
Test case version	1.0
Category / type	FS-Device automated SCL protocol test
Specification (clause)	[3] clause 11.3.3, Figure 37 (services); clause 11.5.3, Figure 42 (state chart)
Configuration / setup	See Table 54
TEST CASE	**CONDITIONS / PERFORMANCE**
Purpose (detailed)	Protocol flow in case of distinct error
Precondition	FS-Device waiting for the first message
Procedure	See XML file "IO-Link-Safety_spec_device_final_testsuite_testcase_3.xml"
Test parameter	See Table 54 and XML file
Post condition	–
TEST CASE RESULTS	**CHECK / REACTION**
Evaluation	Comparison of expected and received values according to the XML file
Test passed	Comparison OK
Test failed (examples)	Comparison not OK
Report	Printout of the automated SCL protocol tester <pass/fail>

Content of file "IO-Link-Safety_spec_device_final_testsuite_testcase_3.xml":

```xml
<?xml version="1.0" encoding="UTF-8"?>
<Testroot xsi:noNamespaceSchemaLocation="IO-Link-Safety-Test-Procedure_Types_V1.0.xsd"
xmlns:xsi="http://www.w3.org/2001/XMLSchema-instance" version="1.2" name="tc_3" date="20.11.2018: 14:01:13.942">
  <FSDeviceSclTestCaseSteps>
    <Transition SourceState="Init" TargetState="SystemStart_20"/>
    <Transition SourceState="SystemStart_20" TargetState="WaitOnSPDU_21"/>
    <FSDeviceReceive PDout="PD" PortNum="valid" MCount="5" setSD="0" ChFAckReq="0" CRC="valid"/>
    <Transition SourceState="WaitOnSPDU_21" TargetState="CheckSPDU_22"/>
    <Transition SourceState="CheckSPDU_22" TargetState="PrepareResponse_25"/>
    <Transition SourceState="PrepareResponse_25" TargetState="WaitOnSPDU_26"/>
    <FSDeviceSend PDin="PD" PortNum="valid" DCount="2" SDset="1" DCommErr="1" DTimeout="1" CRC="valid"/>
    <FSDeviceReceive PDout="PD" PortNum="valid" MCount="6" setSD="0" ChFAckReq="0" CRC="valid"/>
    <Transition SourceState="WaitOnSPDU_26" TargetState="CheckSPDU_27"/>
    <Transition SourceState="CheckSPDU_27" TargetState="PrepareResponse_25"/>
    <Transition SourceState="PrepareResponse_25" TargetState="WaitOnSPDU_26"/>
    <FSDeviceSend PDin="PD" PortNum="valid" DCount="1" SDset="1" DCommErr="1" DTimeout="0" CRC="valid"/>
    <Timeout/>
    <Transition SourceState="WaitOnSPDU_26" TargetState="PrepareResponse_25"/>
    <Transition SourceState="PrepareResponse_25" TargetState="WaitOnSPDU_26"/>
    <FSDeviceSend PDin="PD" PortNum="valid" DCount="1" SDset="1" DCommErr="1" DTimeout="1" CRC="valid"/>
    <FSDeviceReceive PDout="PD" PortNum="valid" MCount="7" setSD="0" ChFAckReq="0" CRC="valid"/>
    <Transition SourceState="WaitOnSPDU_26" TargetState="CheckSPDU_27"/>
    <Transition SourceState="CheckSPDU_27" TargetState="PrepareResponse_25"/>
    <Transition SourceState="PrepareResponse_25" TargetState="WaitOnSPDU_26"/>
    <FSDeviceSend PDin="PD" PortNum="valid" DCount="0" SDset="1" DCommErr="0" DTimeout="1" CRC="valid"/>
    <FSDeviceReceive PDout="PD" PortNum="valid" MCount="2" setSD="0" ChFAckReq="0" CRC="valid"/>
    <Transition SourceState="WaitOnSPDU_26" TargetState="CheckSPDU_27"/>
    <Transition SourceState="CheckSPDU_27" TargetState="PrepareResponse_25"/>
    <Transition SourceState="PrepareResponse_25" TargetState="WaitOnSPDU_26"/>
```

```
    <FSDeviceSend PDin="PD" PortNum="valid" DCount="5" SDset="1" DCommErr="1" DTimeout="0" CRC="valid"/>
  </FSDeviceSclTestCaseSteps>
</Testroot>
```

9.2.4 Test script 4

Table 58 defines the test conditions for this test case. The associated XML file contains steps and message parameters for the state flow check in case of no error, MCount = 1, and Timeout.

Table 58 – FS-Device test script 4

TEST CASE ATTRIBUTES	IDENTIFICATION / REFERENCE
Identification (ID)	SDCI_FSTC_0055
Name	FSTCD_SCLD_FLOW_SETSD0MC1TO
Purpose (short)	
Equipment under test (EUT)	FS-Device
Test case version	1.0
Category / type	FS-Device automated SCL protocol test
Specification (clause)	[3] clause 11.3.3, Figure 37 (services); clause 11.5.3, Figure 42 (state chart)
Configuration / setup	See Table 54
TEST CASE	**CONDITIONS / PERFORMANCE**
Purpose (detailed)	Protocol flow in case of distinct error
Precondition	FS-Device waiting for the first message
Procedure	See XML file "IO-Link-Safety_spec_device_final_testsuite_testcase_4.xml"
Test parameter	See Table 54 and XML file
Post condition	–
TEST CASE RESULTS	**CHECK / REACTION**
Evaluation	Comparison of expected and received values according to the XML file
Test passed	Comparison OK
Test failed (examples)	Comparison not OK
Report	Printout of the automated SCL protocol tester <pass/fail>

Content of file "IO-Link-Safety_spec_device_final_testsuite_testcase_4.xml":


```xml
<?xml version="1.0" encoding="UTF-8"?>
<Testroot xsi:noNamespaceSchemaLocation="IO-Link-Safety-Test-Procedure_Types_V1.0.xsd"
xmlns:xsi="http://www.w3.org/2001/XMLSchema-instance" version="1.2" name="tc_4" date="20.11.2018: 14:01:13.942">
  <FSDeviceSclTestCaseSteps>
    <Transition SourceState="Init" TargetState="SystemStart_20"/>
    <Transition SourceState="SystemStart_20" TargetState="WaitOnSPDU_21"/>
    <FSDeviceReceive PDout="PD" PortNum="valid" MCount="1" setSD="0" ChFAckReq="0" CRC="valid"/>
    <Transition SourceState="WaitOnSPDU_21" TargetState="CheckSPDU_22"/>
    <Transition SourceState="CheckSPDU_22" TargetState="PrepareResponse_25"/>
    <Transition SourceState="PrepareResponse_25" TargetState="WaitOnSPDU_26"/>
    <FSDeviceSend PDin="PD" PortNum="valid" DCount="6" SDset="1" DCommErr="1" DTimeout="1" CRC="valid"/>
    <FSDeviceReceive PDout="PD" PortNum="valid" MCount="0" setSD="0" ChFAckReq="0" CRC="valid"/>
    <Transition SourceState="WaitOnSPDU_26" TargetState="CheckSPDU_27"/>
    <Transition SourceState="CheckSPDU_27" TargetState="PrepareResponse_25"/>
    <Transition SourceState="PrepareResponse_25" TargetState="WaitOnSPDU_26"/>
    <FSDeviceSend PDin="PD" PortNum="valid" DCount="7" SDset="1" DCommErr="1" DTimeout="0" CRC="valid"/>
    <FSDeviceReceive PDout="PD" PortNum="valid" MCount="1" setSD="0" ChFAckReq="0" CRC="valid"/>
    <Transition SourceState="WaitOnSPDU_26" TargetState="CheckSPDU_27"/>
    <Transition SourceState="CheckSPDU_27" TargetState="PrepareResponse_25"/>
    <Transition SourceState="PrepareResponse_25" TargetState="WaitOnSPDU_26"/>
    <FSDeviceSend PDin="PD" PortNum="valid" DCount="6" SDset="1" DCommErr="0" DTimeout="0" CRC="valid"/>
    <FSDeviceReceive PDout="PD" PortNum="valid" MCount="2" setSD="0" ChFAckReq="0" CRC="valid"/>
    <Transition SourceState="WaitOnSPDU_26" TargetState="CheckSPDU_27"/>
    <Transition SourceState="CheckSPDU_27" TargetState="PrepareResponse_25"/>
    <Transition SourceState="PrepareResponse_25" TargetState="WaitOnSPDU_26"/>
    <FSDeviceSend PDin="PD" PortNum="valid" DCount="5" SDset="1" DCommErr="0" DTimeout="0" CRC="valid"/>
    <FSDeviceReceive PDout="PD" PortNum="valid" MCount="1" setSD="0" ChFAckReq="0" CRC="valid"/>
    <Transition SourceState="WaitOnSPDU_26" TargetState="CheckSPDU_27"/>
    <Transition SourceState="CheckSPDU_27" TargetState="PrepareResponse_25"/>
```

```
    <Transition SourceState="PrepareResponse_25" TargetState="WaitOnSPDU_26"/>
    <FSDeviceSend PDin="PD" PortNum="valid" DCount="6" SDset="1" DCommErr="1" DTimeout="0" CRC="valid"/>
  </FSDeviceSclTestCaseSteps>
</Testroot>
```

9.2.5 Test script 5

Table 59 defines the test conditions for this test case. The associated XML file contains steps and message parameters for the state flow check in case of a setSD error and MCount = 0.

Table 59 – FS-Device test script 5

TEST CASE ATTRIBUTES	IDENTIFICATION / REFERENCE
Identification (ID)	SDCI_FSTC_0056
Name	FSTCD_SCLD_FLOW_SETSD1MC0
Purpose (short)	
Equipment under test (EUT)	FS-Device
Test case version	1.0
Category / type	FS-Device automated SCL protocol test
Specification (clause)	[3] clause 11.3.3, Figure 37 (services); clause 11.5.3, Figure 42 (state chart)
Configuration / setup	See Table 54
TEST CASE	**CONDITIONS / PERFORMANCE**
Purpose (detailed)	Protocol flow in case of distinct error
Precondition	FS-Device waiting for the first message
Procedure	See XML file "IO-Link-Safety_spec_device_final_testsuite_testcase_5.xml"
Test parameter	See Table 54 and XML file
Post condition	–
TEST CASE RESULTS	**CHECK / REACTION**
Evaluation	Comparison of expected and received values according to the XML file
Test passed	Comparison OK
Test failed (examples)	Comparison not OK
Report	Printout of the automated SCL protocol tester <pass/fail>

Content of file "IO-Link-Safety_spec_device_final_testsuite_testcase_5.xml":

```
<?xml version="1.0" encoding="UTF-8"?>
<Testroot xsi:noNamespaceSchemaLocation="IO-Link-Safety-Test-Procedure_Types_V1.0.xsd"
xmlns:xsi="http://www.w3.org/2001/XMLSchema-instance" version="1.2" name="tc_5" date="20.11.2018: 14:01:13.943">
  <FSDeviceSclTestCaseSteps>
    <Transition SourceState="Init" TargetState="SystemStart_20"/>
    <Transition SourceState="SystemStart_20" TargetState="WaitOnSPDU_21"/>
    <FSDeviceReceive PDout="PD" PortNum="valid" MCount="0" setSD="1" ChFAckReq="0" CRC="valid"/>
    <Transition SourceState="WaitOnSPDU_21" TargetState="CheckSPDU_22"/>
    <Transition SourceState="CheckSPDU_22" TargetState="PrepareResponse_23"/>
    <Transition SourceState="PrepareResponse_23" TargetState="WaitOnSPDU_24"/>
    <FSDeviceSend PDin="PD" PortNum="valid" DCount="7" SDset="1" DCommErr="0" DTimeout="0" CRC="valid"/>
    <FSDeviceReceive PDout="PD" PortNum="valid" MCount="6" setSD="0" ChFAckReq="0" CRC="invalid"/>
    <Transition SourceState="WaitOnSPDU_24" TargetState="PrepareResponse_25"/>
    <Transition SourceState="PrepareResponse_25" TargetState="WaitOnSPDU_26"/>
    <FSDeviceSend PDin="PD" PortNum="valid" DCount="1" SDset="1" DCommErr="1" DTimeout="0" CRC="valid"/>
    <FSDeviceReceive PDout="PD" PortNum="valid" MCount="3" setSD="0" ChFAckReq="0" CRC="valid"/>
    <Transition SourceState="WaitOnSPDU_26" TargetState="CheckSPDU_27"/>
    <Transition SourceState="CheckSPDU_27" TargetState="PrepareResponse_25"/>
    <Transition SourceState="PrepareResponse_25" TargetState="WaitOnSPDU_26"/>
    <FSDeviceSend PDin="PD" PortNum="valid" DCount="4" SDset="1" DCommErr="1" DTimeout="0" CRC="valid"/>
  </FSDeviceSclTestCaseSteps>
</Testroot>
```

9.2.6 Test script 6

Table 60 defines the test conditions for this test case. The associated XML file contains steps and message parameters for the state flow check in case of a setSD error, MCount = 2, and Timeout.

Table 60 – FS-Device test script 6

TEST CASE ATTRIBUTES	IDENTIFICATION / REFERENCE
Identification (ID)	SDCI_FSTC_0057
Name	FSTCD_SCLD_FLOW_SETSD0MC2TO
Purpose (short)	
Equipment under test (EUT)	FS-Device
Test case version	1.0
Category / type	FS-Device automated SCL protocol test
Specification (clause)	[3] clause 11.3.3, Figure 37 (services); clause 11.5.3, Figure 42 (state chart)
Configuration / setup	See Table 54
TEST CASE	**CONDITIONS / PERFORMANCE**
Purpose (detailed)	Protocol flow in case of distinct error
Precondition	FS-Device waiting for the first message
Procedure	See XML file "IO-Link-Safety_spec_device_final_testsuite_testcase_6.xml"
Test parameter	See Table 54 and XML file
Post condition	–
TEST CASE RESULTS	**CHECK / REACTION**
Evaluation	Comparison of expected and received values according to the XML file
Test passed	Comparison OK
Test failed (examples)	Comparison not OK
Report	Printout of the automated SCL protocol tester <pass/fail>

Content of file "IO-Link-Safety_spec_device_final_testsuite_testcase_6.xml":

```xml
<?xml version="1.0" encoding="UTF-8"?>
<Testroot xsi:noNamespaceSchemaLocation="IO-Link-Safety-Test-Procedure_Types_V1.0.xsd"
xmlns:xsi="http://www.w3.org/2001/XMLSchema-instance" version="1.2" name="tc_6" date="20.11.2018: 14:01:13.943">
  <FSDeviceSclTestCaseSteps>
    <Transition SourceState="Init" TargetState="SystemStart_20"/>
    <Transition SourceState="SystemStart_20" TargetState="WaitOnSPDU_21"/>
    <FSDeviceReceive PDout="PD" PortNum="valid" MCount="2" setSD="0" ChFAckReq="0" CRC="valid"/>
    <Transition SourceState="WaitOnSPDU_21" TargetState="CheckSPDU_22"/>
    <Transition SourceState="CheckSPDU_22" TargetState="PrepareResponse_25"/>
    <Transition SourceState="PrepareResponse_25" TargetState="WaitOnSPDU_26"/>
    <FSDeviceSend PDin="PD" PortNum="valid" DCount="5" SDset="1" DCommErr="1" DTimeout="1" CRC="valid"/>
    <FSDeviceReceive PDout="PD" PortNum="valid" MCount="3" setSD="0" ChFAckReq="0" CRC="valid"/>
    <Transition SourceState="WaitOnSPDU_26" TargetState="CheckSPDU_27"/>
    <Transition SourceState="CheckSPDU_27" TargetState="PrepareResponse_25"/>
    <Transition SourceState="PrepareResponse_25" TargetState="WaitOnSPDU_26"/>
    <FSDeviceSend PDin="PD" PortNum="valid" DCount="4" SDset="1" DCommErr="1" DTimeout="0" CRC="valid"/>
    <FSDeviceReceive PDout="PD" PortNum="valid" MCount="4" setSD="0" ChFAckReq="0" CRC="valid"/>
    <Transition SourceState="WaitOnSPDU_26" TargetState="CheckSPDU_27"/>
    <Transition SourceState="CheckSPDU_27" TargetState="PrepareResponse_25"/>
    <Transition SourceState="PrepareResponse_25" TargetState="WaitOnSPDU_26"/>
    <FSDeviceSend PDin="PD" PortNum="valid" DCount="3" SDset="1" DCommErr="0" DTimeout="0" CRC="valid"/>
    <FSDeviceReceive PDout="PD" PortNum="valid" MCount="5" setSD="0" ChFAckReq="0" CRC="valid"/>
    <Transition SourceState="WaitOnSPDU_26" TargetState="CheckSPDU_27"/>
    <Transition SourceState="CheckSPDU_27" TargetState="PrepareResponse_25"/>
    <Transition SourceState="PrepareResponse_25" TargetState="WaitOnSPDU_26"/>
    <FSDeviceSend PDin="PD" PortNum="valid" DCount="2" SDset="1" DCommErr="0" DTimeout="0" CRC="valid"/>
    <FSDeviceReceive PDout="PD" PortNum="valid" MCount="6" setSD="0" ChFAckReq="0" CRC="valid"/>
    <Transition SourceState="WaitOnSPDU_26" TargetState="CheckSPDU_27"/>
```

```
    <Transition SourceState="CheckSPDU_27" TargetState="PrepareResponse_23"/>
    <Transition SourceState="PrepareResponse_23" TargetState="WaitOnSPDU_24"/>
    <FSDeviceSend PDin="PD" PortNum="valid" DCount="1" SDset="0" DCommErr="0" DTimeout="0" CRC="valid"/>
    <FSDeviceReceive PDout="PD" PortNum="valid" MCount="7" setSD="1" ChFAckReq="0" CRC="valid"/>
    <Transition SourceState="WaitOnSPDU_24" TargetState="CheckSPDU_22"/>
    <Transition SourceState="CheckSPDU_22" TargetState="PrepareResponse_23"/>
    <Transition SourceState="PrepareResponse_23" TargetState="WaitOnSPDU_24"/>
    <FSDeviceSend PDin="PD" PortNum="valid" DCount="0" SDset="0" DCommErr="0" DTimeout="0" CRC="valid"/>
    <FSDeviceReceive PDout="PD" PortNum="valid" MCount="4" setSD="0" ChFAckReq="0" CRC="valid"/>
    <Transition SourceState="WaitOnSPDU_24" TargetState="CheckSPDU_22"/>
    <Transition SourceState="CheckSPDU_22" TargetState="PrepareResponse_25"/>
    <Transition SourceState="PrepareResponse_25" TargetState="WaitOnSPDU_26"/>
    <FSDeviceSend PDin="PD" PortNum="valid" DCount="3" SDset="1" DCommErr="1" DTimeout="0" CRC="valid"/>
  </FSDeviceSclTestCaseSteps>
</Testroot>
```

9.2.7 Test script 7

Table 61 defines the test conditions for this test case. The associated XML file contains steps and message parameters for the state flow check in case of no error, MCount = 1, and Timeout.

Table 61 – FS-Device test script 7

TEST CASE ATTRIBUTES	IDENTIFICATION / REFERENCE
Identification (ID)	SDCI_FSTC_0058
Name	FSTCD_SCLD_FLOW_SETSD0MC1TO
Purpose (short)	
Equipment under test (EUT)	FS-Device
Test case version	1.0
Category / type	FS-Device automated SCL protocol test
Specification (clause)	[3] clause 11.3.3, Figure 37 (services); clause 11.5.3, Figure 42 (state chart)
Configuration / setup	See Table 54
TEST CASE	**CONDITIONS / PERFORMANCE**
Purpose (detailed)	Protocol flow in case of distinct error
Precondition	FS-Device waiting for the first message
Procedure	See XML file "IO-Link-Safety_spec_device_final_testsuite_testcase_7.xml"
Test parameter	See Table 54 and XML file
Post condition	–
TEST CASE RESULTS	**CHECK / REACTION**
Evaluation	Comparison of expected and received values according to the XML file
Test passed	Comparison OK
Test failed (examples)	Comparison not OK
Report	Printout of the automated SCL protocol tester <pass/fail>

Content of file "IO-Link-Safety_spec_device_final_testsuite_testcase_7.xml":

```xml
<?xml version="1.0" encoding="UTF-8"?>
<Testroot xsi:noNamespaceSchemaLocation="IO-Link-Safety-Test-Procedure_Types_V1.0.xsd"
xmlns:xsi="http://www.w3.org/2001/XMLSchema-instance" version="1.2" name="tc_7" date="20.11.2018: 14:01:13.943">
  <FSDeviceSclTestCaseSteps>
    <Transition SourceState="Init" TargetState="SystemStart_20"/>
    <Transition SourceState="SystemStart_20" TargetState="WaitOnSPDU_21"/>
    <FSDeviceReceive PDout="PD" PortNum="valid" MCount="1" setSD="0" ChFAckReq="0" CRC="valid"/>
    <Transition SourceState="WaitOnSPDU_21" TargetState="CheckSPDU_22"/>
    <Transition SourceState="CheckSPDU_22" TargetState="PrepareResponse_25"/>
    <Transition SourceState="PrepareResponse_25" TargetState="WaitOnSPDU_26"/>
    <FSDeviceSend PDin="PD" PortNum="valid" DCount="6" SDset="1" DCommErr="1" DTimeout="1" CRC="valid"/>
    <FSDeviceReceive PDout="PD" PortNum="valid" MCount="0" setSD="0" ChFAckReq="0" CRC="invalid"/>
    <Transition SourceState="WaitOnSPDU_26" TargetState="CheckSPDU_27"/>
    <Transition SourceState="CheckSPDU_27" TargetState="PrepareResponse_25"/>
    <Transition SourceState="PrepareResponse_25" TargetState="WaitOnSPDU_26"/>
    <FSDeviceSend PDin="PD" PortNum="valid" DCount="7" SDset="1" DCommErr="1" DTimeout="0" CRC="valid"/>
    <FSDeviceReceive PDout="PD" PortNum="valid" MCount="4" setSD="0" ChFAckReq="0" CRC="invalid"/>
    <Transition SourceState="WaitOnSPDU_26" TargetState="CheckSPDU_27"/>
    <Transition SourceState="CheckSPDU_27" TargetState="PrepareResponse_25"/>
    <Transition SourceState="PrepareResponse_25" TargetState="WaitOnSPDU_26"/>
    <FSDeviceSend PDin="PD" PortNum="valid" DCount="3" SDset="1" DCommErr="1" DTimeout="0" CRC="valid"/>
  </FSDeviceSclTestCaseSteps>
</Testroot>
```

9.2.8 Test script 8

Table 62 defines the test conditions for this test case. The associated XML file contains steps and message parameters for the state flow check in case of no error, MCount = 7, and Timeout.

Table 62 – FS-Device test script 8

TEST CASE ATTRIBUTES	IDENTIFICATION / REFERENCE
Identification (ID)	SDCI_FSTC_0059
Name	FSTCD_SCLD_FLOW_SETSD0MC7TO
Purpose (short)	
Equipment under test (EUT)	FS-Device
Test case version	1.0
Category / type	FS-Device automated SCL protocol test
Specification (clause)	[3] clause 11.3.3, Figure 37 (services); clause 11.5.3, Figure 42 (state chart)
Configuration / setup	See Table 54
TEST CASE	**CONDITIONS / PERFORMANCE**
Purpose (detailed)	Protocol flow in case of distinct error
Precondition	FS-Device waiting for the first message
Procedure	See XML file "IO-Link-Safety_spec_device_final_testsuite_testcase_8.xml"
Test parameter	See Table 54 and XML file
Post condition	–
TEST CASE RESULTS	**CHECK / REACTION**
Evaluation	Comparison of expected and received values according to the XML file
Test passed	Comparison OK
Test failed (examples)	Comparison not OK
Report	Printout of the automated SCL protocol tester <pass/fail>

Content of file "IO-Link-Safety_spec_device_final_testsuite_testcase_8.xml":

```xml
<?xml version="1.0" encoding="UTF-8"?>
<Testroot xsi:noNamespaceSchemaLocation="IO-Link-Safety-Test-Procedure_Types_V1.0.xsd"
xmlns:xsi="http://www.w3.org/2001/XMLSchema-instance" version="1.2" name="tc_8" date="20.11.2018: 14:01:13.943">
  <FSDeviceSclTestCaseSteps>
    <Transition SourceState="Init" TargetState="SystemStart_20"/>
    <Transition SourceState="SystemStart_20" TargetState="WaitOnSPDU_21"/>
    <FSDeviceReceive PDout="PD" PortNum="valid" MCount="7" setSD="0" ChFAckReq="0" CRC="valid"/>
    <Transition SourceState="WaitOnSPDU_21" TargetState="CheckSPDU_22"/>
    <Transition SourceState="CheckSPDU_22" TargetState="PrepareResponse_25"/>
    <Transition SourceState="PrepareResponse_25" TargetState="WaitOnSPDU_26"/>
    <FSDeviceSend PDin="PD" PortNum="valid" DCount="0" SDset="1" DCommErr="1" DTimeout="1" CRC="valid"/>
    <FSDeviceReceive PDout="PD" PortNum="valid" MCount="1" setSD="0" ChFAckReq="0" CRC="valid"/>
    <Transition SourceState="WaitOnSPDU_26" TargetState="CheckSPDU_27"/>
    <Transition SourceState="CheckSPDU_27" TargetState="PrepareResponse_25"/>
    <Transition SourceState="PrepareResponse_25" TargetState="WaitOnSPDU_26"/>
    <FSDeviceSend PDin="PD" PortNum="valid" DCount="6" SDset="1" DCommErr="1" DTimeout="0" CRC="valid"/>
    <FSDeviceReceive PDout="PD" PortNum="valid" MCount="5" setSD="0" ChFAckReq="0" CRC="invalid"/>
    <Transition SourceState="WaitOnSPDU_26" TargetState="CheckSPDU_27"/>
    <Transition SourceState="CheckSPDU_27" TargetState="PrepareResponse_25"/>
    <Transition SourceState="PrepareResponse_25" TargetState="WaitOnSPDU_26"/>
    <FSDeviceSend PDin="PD" PortNum="valid" DCount="2" SDset="1" DCommErr="1" DTimeout="0" CRC="valid"/>
  </FSDeviceSclTestCaseSteps>
</Testroot>
```

9.2.9 Test script 9

Table 63 defines the test conditions for this test case. The associated XML file contains steps and message parameters for the state flow check in case of a CRC error and MCount = 0, and Timeout.

Table 63 – FS-Device test script 9

TEST CASE ATTRIBUTES	IDENTIFICATION / REFERENCE
Identification (ID)	SDCI_FSTC_0060
Name	FSTCD_SCLD_FLOW_CRC1MC0TO
Purpose (short)	
Equipment under test (EUT)	FS-Device
Test case version	1.0
Category / type	FS-Device automated SCL protocol test
Specification (clause)	[3] clause 11.3.3, Figure 37 (services); clause 11.5.3, Figure 42 (state chart)
Configuration / setup	See Table 54
TEST CASE	**CONDITIONS / PERFORMANCE**
Purpose (detailed)	Protocol flow in case of distinct error
Precondition	FS-Device waiting for the first message
Procedure	See XML file "IO-Link-Safety_spec_device_final_testsuite_testcase_9.xml"
Test parameter	See Table 54 and XML file
Post condition	–
TEST CASE RESULTS	**CHECK / REACTION**
Evaluation	Comparison of expected and received values according to the XML file
Test passed	Comparison OK
Test failed (examples)	Comparison not OK
Report	Printout of the automated SCL protocol tester <pass/fail>

Content of file "IO-Link-Safety_spec_device_final_testsuite_testcase_9.xml":

```xml
<?xml version="1.0" encoding="UTF-8"?>
<Testroot xsi:noNamespaceSchemaLocation="IO-Link-Safety-Test-Procedure_Types_V1.0.xsd"
xmlns:xsi="http://www.w3.org/2001/XMLSchema-instance" version="1.2" name="tc_9" date="20.11.2018: 14:01:13.943">
  <FSDeviceSclTestCaseSteps>
    <Transition SourceState="Init" TargetState="SystemStart_20"/>
    <Transition SourceState="SystemStart_20" TargetState="WaitOnSPDU_21"/>
    <FSDeviceReceive PDout="PD" PortNum="valid" MCount="0" setSD="0" ChFAckReq="0" CRC="invalid"/>
    <Transition SourceState="WaitOnSPDU_21" TargetState="CheckSPDU_22"/>
    <Transition SourceState="CheckSPDU_22" TargetState="PrepareResponse_25"/>
    <Transition SourceState="PrepareResponse_25" TargetState="WaitOnSPDU_26"/>
    <FSDeviceSend PDin="PD" PortNum="valid" DCount="7" SDset="1" DCommErr="1" DTimeout="1" CRC="valid"/>
    <Timeout/>
    <Transition SourceState="WaitOnSPDU_26" TargetState="PrepareResponse_25"/>
    <Transition SourceState="PrepareResponse_25" TargetState="WaitOnSPDU_26"/>
    <FSDeviceSend PDin="PD" PortNum="valid" DCount="7" SDset="1" DCommErr="1" DTimeout="1" CRC="valid"/>
    <FSDeviceReceive PDout="PD" PortNum="valid" MCount="6" setSD="0" ChFAckReq="0" CRC="valid"/>
    <Transition SourceState="WaitOnSPDU_26" TargetState="CheckSPDU_27"/>
    <Transition SourceState="CheckSPDU_27" TargetState="PrepareResponse_25"/>
    <Transition SourceState="PrepareResponse_25" TargetState="WaitOnSPDU_26"/>
    <FSDeviceSend PDin="PD" PortNum="valid" DCount="1" SDset="1" DCommErr="1" DTimeout="1" CRC="valid"/>
  </FSDeviceSclTestCaseSteps>
</Testroot>
```

9.2.10 Test script 10

Table 64 defines the test conditions for this test case. The associated XML file contains steps and message parameters for the state flow check in case of a setSD error, MCount = 0, and Timeout.

Table 64 – FS-Device test script 10

TEST CASE ATTRIBUTES	IDENTIFICATION / REFERENCE
Identification (ID)	SDCI_FSTC_0061
Name	FSTCD_SCLD_FLOW_SETSD1MC0TO
Purpose (short)	
Equipment under test (EUT)	FS-Device
Test case version	1.0
Category / type	FS-Device automated SCL protocol test
Specification (clause)	[3] clause 11.3.3, Figure 37 (services); clause 11.5.3, Figure 42 (state chart)
Configuration / setup	See Table 54
TEST CASE	**CONDITIONS / PERFORMANCE**
Purpose (detailed)	Protocol flow in case of distinct error
Precondition	FS-Device waiting for the first message
Procedure	See XML file "IO-Link-Safety_spec_device_final_testsuite_testcase_10.xml"
Test parameter	See Table 54 and XML file
Post condition	–
TEST CASE RESULTS	**CHECK / REACTION**
Evaluation	Comparison of expected and received values according to the XML file
Test passed	Comparison OK
Test failed (examples)	Comparison not OK
Report	Printout of the automated SCL protocol tester <pass/fail>

Content of file "IO-Link-Safety_spec_device_final_testsuite_testcase_10.xml":

```
<?xml version="1.0" encoding="UTF-8"?>
<Testroot xsi:noNamespaceSchemaLocation="IO-Link-Safety-Test-Procedure_Types_V1.0.xsd"
xmlns:xsi="http://www.w3.org/2001/XMLSchema-instance" version="1.2" name="tc_10" date="20.11.2018: 14:01:13.943">
  <FSDeviceSclTestCaseSteps>
    <Transition SourceState="Init" TargetState="SystemStart_20"/>
    <Transition SourceState="SystemStart_20" TargetState="WaitOnSPDU_21"/>
    <FSDeviceReceive PDout="PD" PortNum="valid" MCount="0" setSD="1" ChFAckReq="0" CRC="valid"/>
    <Transition SourceState="WaitOnSPDU_21" TargetState="CheckSPDU_22"/>
    <Transition SourceState="CheckSPDU_22" TargetState="PrepareResponse_23"/>
    <Transition SourceState="PrepareResponse_23" TargetState="WaitOnSPDU_24"/>
    <FSDeviceSend PDin="PD" PortNum="valid" DCount="7" SDset="1" DCommErr="0" DTimeout="0" CRC="valid"/>
    <FSDeviceReceive PDout="PD" PortNum="valid" MCount="1" setSD="0" ChFAckReq="0" CRC="valid"/>
    <Transition SourceState="WaitOnSPDU_24" TargetState="CheckSPDU_22"/>
    <Transition SourceState="CheckSPDU_22" TargetState="PrepareResponse_23"/>
    <Transition SourceState="PrepareResponse_23" TargetState="WaitOnSPDU_24"/>
    <FSDeviceSend PDin="PD" PortNum="valid" DCount="6" SDset="1" DCommErr="0" DTimeout="0" CRC="valid"/>
    <FSDeviceReceive PDout="PD" PortNum="valid" MCount="2" setSD="0" ChFAckReq="0" CRC="valid"/>
    <Transition SourceState="WaitOnSPDU_24" TargetState="CheckSPDU_22"/>
    <Transition SourceState="CheckSPDU_22" TargetState="PrepareResponse_23"/>
    <Transition SourceState="PrepareResponse_23" TargetState="WaitOnSPDU_24"/>
    <FSDeviceSend PDin="PD" PortNum="valid" DCount="5" SDset="1" DCommErr="0" DTimeout="0" CRC="valid"/>
    <Timeout/>
    <Transition SourceState="WaitOnSPDU_24" TargetState="PrepareResponse_25"/>
    <Transition SourceState="PrepareResponse_25" TargetState="WaitOnSPDU_26"/>
    <FSDeviceSend PDin="PD" PortNum="valid" DCount="5" SDset="1" DCommErr="0" DTimeout="1" CRC="valid"/>
    <FSDeviceReceive PDout="PD" PortNum="valid" MCount="7" setSD="0" ChFAckReq="0" CRC="invalid"/>
    <Transition SourceState="WaitOnSPDU_26" TargetState="CheckSPDU_27"/>
    <Transition SourceState="CheckSPDU_27" TargetState="PrepareResponse_25"/>
```

```
    <Transition SourceState="PrepareResponse_25" TargetState="WaitOnSPDU_26"/>
    <FSDeviceSend PDin="PD" PortNum="valid" DCount="0" SDset="1" DCommErr="1" DTimeout="1" CRC="valid"/>
  </FSDeviceSclTestCaseSteps>
</Testroot>
```

9.2.11 Test script 11

Table 65 defines the test conditions for this test case. The associated XML file contains steps and message parameters for the state flow check in case of a setSD error and MCount = 0.

Table 65 – FS-Device test script 11

TEST CASE ATTRIBUTES	IDENTIFICATION / REFERENCE
Identification (ID)	SDCI_FSTC_0062
Name	FSTCD_SCLD_FLOW_SETSD1MC0
Purpose (short)	
Equipment under test (EUT)	FS-Device
Test case version	1.0
Category / type	FS-Device automated SCL protocol test
Specification (clause)	[3] clause 11.3.3, Figure 37 (services); clause 11.5.3, Figure 42 (state chart)
Configuration / setup	See Table 54
TEST CASE	**CONDITIONS / PERFORMANCE**
Purpose (detailed)	Protocol flow in case of distinct error
Precondition	FS-Device waiting for the first message
Procedure	See XML file "IO-Link-Safety_spec_device_final_testsuite_testcase_11.xml"
Test parameter	See Table 54 and XML file
Post condition	–
TEST CASE RESULTS	**CHECK / REACTION**
Evaluation	Comparison of expected and received values according to the XML file
Test passed	Comparison OK
Test failed (examples)	Comparison not OK
Report	Printout of the automated SCL protocol tester <pass/fail>

Content of file "IO-Link-Safety_spec_device_final_testsuite_testcase_11.xml":

```xml
<?xml version="1.0" encoding="UTF-8"?>
<Testroot xsi:noNamespaceSchemaLocation="IO-Link-Safety-Test-Procedure_Types_V1.0.xsd"
xmlns:xsi="http://www.w3.org/2001/XMLSchema-instance" version="1.2" name="tc_11" date="20.11.2018: 14:01:13.944">
  <FSDeviceSclTestCaseSteps>
    <Transition SourceState="Init" TargetState="SystemStart_20"/>
    <Transition SourceState="SystemStart_20" TargetState="WaitOnSPDU_21"/>
    <FSDeviceReceive PDout="PD" PortNum="valid" MCount="0" setSD="1" ChFAckReq="0" CRC="valid"/>
    <Transition SourceState="WaitOnSPDU_21" TargetState="CheckSPDU_22"/>
    <Transition SourceState="CheckSPDU_22" TargetState="PrepareResponse_23"/>
    <Transition SourceState="PrepareResponse_23" TargetState="WaitOnSPDU_24"/>
    <FSDeviceSend PDin="PD" PortNum="valid" DCount="7" SDset="1" DCommErr="0" DTimeout="0" CRC="valid"/>
    <FSDeviceReceive PDout="PD" PortNum="valid" MCount="1" setSD="0" ChFAckReq="0" CRC="valid"/>
    <Transition SourceState="WaitOnSPDU_24" TargetState="CheckSPDU_22"/>
    <Transition SourceState="CheckSPDU_22" TargetState="PrepareResponse_23"/>
    <Transition SourceState="PrepareResponse_23" TargetState="WaitOnSPDU_24"/>
    <FSDeviceSend PDin="PD" PortNum="valid" DCount="6" SDset="1" DCommErr="0" DTimeout="0" CRC="valid"/>
    <FSDeviceReceive PDout="PD" PortNum="valid" MCount="0" setSD="0" ChFAckReq="0" CRC="valid"/>
    <Transition SourceState="WaitOnSPDU_24" TargetState="CheckSPDU_22"/>
    <Transition SourceState="CheckSPDU_22" TargetState="PrepareResponse_23"/>
    <Transition SourceState="PrepareResponse_23" TargetState="WaitOnSPDU_24"/>
    <FSDeviceSend PDin="PD" PortNum="valid" DCount="7" SDset="1" DCommErr="0" DTimeout="0" CRC="valid"/>
    <FSDeviceReceive PDout="PD" PortNum="valid" MCount="1" setSD="0" ChFAckReq="0" CRC="valid"/>
    <Transition SourceState="WaitOnSPDU_24" TargetState="CheckSPDU_22"/>
    <Transition SourceState="CheckSPDU_22" TargetState="PrepareResponse_23"/>
    <Transition SourceState="PrepareResponse_23" TargetState="WaitOnSPDU_24"/>
    <FSDeviceSend PDin="PD" PortNum="valid" DCount="6" SDset="0" DCommErr="0" DTimeout="0" CRC="valid"/>
    <FSDeviceReceive PDout="PD" PortNum="valid" MCount="2" setSD="0" ChFAckReq="0" CRC="valid"/>
    <Transition SourceState="WaitOnSPDU_24" TargetState="CheckSPDU_22"/>
    <Transition SourceState="CheckSPDU_22" TargetState="PrepareResponse_23"/>
```

```
    <Transition SourceState="PrepareResponse_23" TargetState="WaitOnSPDU_24"/>
    <FSDeviceSend PDin="PD" PortNum="valid" DCount="5" SDset="0" DCommErr="0" DTimeout="0" CRC="valid"/>
    <FSDeviceReceive PDout="PD" PortNum="valid" MCount="1" setSD="0" ChFAckReq="0" CRC="valid"/>
    <Transition SourceState="WaitOnSPDU_24" TargetState="CheckSPDU_22"/>
    <Transition SourceState="CheckSPDU_22" TargetState="PrepareResponse_25"/>
    <Transition SourceState="PrepareResponse_25" TargetState="WaitOnSPDU_26"/>
    <FSDeviceSend PDin="PD" PortNum="valid" DCount="6" SDset="1" DCommErr="1" DTimeout="0" CRC="valid"/>
  </FSDeviceSclTestCaseSteps>
</Testroot>
```

9.2.12 Test script 12

Table 66 defines the test conditions for this test case. The associated XML file contains steps and message parameters for the state flow check in case of a setSD error, MCount = 0, and DCommErr.

Table 66 – FS-Device test script 12

TEST CASE ATTRIBUTES	IDENTIFICATION / REFERENCE
Identification (ID)	SDCI_FSTC_0063
Name	FSTCD_SCLD_FLOW_SETSD1MC0DCE1
Purpose (short)	
Equipment under test (EUT)	FS-Device
Test case version	1.0
Category / type	FS-Device automated SCL protocol test
Specification (clause)	[3] clause 11.3.3, Figure 37 (services); clause 11.5.3, Figure 42 (state chart)
Configuration / setup	See Table 54
TEST CASE	**CONDITIONS / PERFORMANCE**
Purpose (detailed)	Protocol flow in case of distinct error
Precondition	FS-Device waiting for the first message
Procedure	See XML file "IO-Link-Safety_spec_device_final_testsuite_testcase_12.xml"
Test parameter	See Table 54 and XML file
Post condition	–
TEST CASE RESULTS	**CHECK / REACTION**
Evaluation	Comparison of expected and received values according to the XML file
Test passed	Comparison OK
Test failed (examples)	Comparison not OK
Report	Printout of the automated SCL protocol tester <pass/fail>

Content of file "IO-Link-Safety_spec_device_final_testsuite_testcase_12.xml":

```
<?xml version="1.0" encoding="UTF-8"?>
<Testroot xsi:noNamespaceSchemaLocation="IO-Link-Safety-Test-Procedure_Types_V1.0.xsd"
xmlns:xsi="http://www.w3.org/2001/XMLSchema-instance" version="1.2" name="tc_12" date="20.11.2018: 14:01:13.944">
  <FSDeviceSclTestCaseSteps>
    <Transition SourceState="Init" TargetState="SystemStart_20"/>
    <Transition SourceState="SystemStart_20" TargetState="WaitOnSPDU_21"/>
    <FSDeviceReceive PDout="PD" PortNum="valid" MCount="0" setSD="1" ChFAckReq="0" CRC="valid"/>
    <Transition SourceState="WaitOnSPDU_21" TargetState="CheckSPDU_22"/>
    <Transition SourceState="CheckSPDU_22" TargetState="PrepareResponse_23"/>
    <Transition SourceState="PrepareResponse_23" TargetState="WaitOnSPDU_24"/>
    <FSDeviceSend PDin="PD" PortNum="valid" DCount="7" SDset="1" DCommErr="0" DTimeout="0" CRC="valid"/>
    <FSDeviceReceive PDout="PD" PortNum="valid" MCount="4" setSD="0" ChFAckReq="0" CRC="invalid"/>
    <Transition SourceState="WaitOnSPDU_24" TargetState="PrepareResponse_25"/>
    <Transition SourceState="PrepareResponse_25" TargetState="WaitOnSPDU_26"/>
    <FSDeviceSend PDin="PD" PortNum="valid" DCount="3" SDset="1" DCommErr="1" DTimeout="0" CRC="valid"/>
    <FSDeviceReceive PDout="PD" PortNum="valid" MCount="1" setSD="0" ChFAckReq="0" CRC="valid"/>
    <Transition SourceState="WaitOnSPDU_26" TargetState="CheckSPDU_27"/>
    <Transition SourceState="CheckSPDU_27" TargetState="PrepareResponse_25"/>
    <Transition SourceState="PrepareResponse_25" TargetState="WaitOnSPDU_26"/>
    <FSDeviceSend PDin="PD" PortNum="valid" DCount="6" SDset="1" DCommErr="1" DTimeout="0" CRC="valid"/>
  </FSDeviceSclTestCaseSteps>
</Testroot>
```

9.2.13 Test script 13

Table 67 defines the test conditions for this test case. The associated XML file contains steps and message parameters for the state flow check in case of a setSD error, MCount = 0, and DCommErr.

Table 67 – FS-Device test script 13

TEST CASE ATTRIBUTES	IDENTIFICATION / REFERENCE
Identification (ID)	SDCI_FSTC_0064
Name	FSTCD_SCLD_FLOW_SETSD1MC0DCE1
Purpose (short)	
Equipment under test (EUT)	FS-Device
Test case version	1.0
Category / type	FS-Device automated SCL protocol test
Specification (clause)	[3] clause 11.3.3, Figure 37 (services); clause 11.5.3, Figure 42 (state chart)
Configuration / setup	See Table 54
TEST CASE	**CONDITIONS / PERFORMANCE**
Purpose (detailed)	Protocol flow in case of distinct error
Precondition	FS-Device waiting for the first message
Procedure	See XML file "IO-Link-Safety_spec_device_final_testsuite_testcase_13.xml"
Test parameter	See Table 54 and XML file
Post condition	–
TEST CASE RESULTS	**CHECK / REACTION**
Evaluation	Comparison of expected and received values according to the XML file
Test passed	Comparison OK
Test failed (examples)	Comparison not OK
Report	Printout of the automated SCL protocol tester <pass/fail>

Content of file "IO-Link-Safety_spec_device_final_testsuite_testcase_13.xml":

```xml
<?xml version="1.0" encoding="UTF-8"?>
<Testroot xsi:noNamespaceSchemaLocation="IO-Link-Safety-Test-Procedure_Types_V1.0.xsd"
xmlns:xsi="http://www.w3.org/2001/XMLSchema-instance" version="1.2" name="tc_13" date="20.11.2018: 14:01:13.944">
  <FSDeviceSclTestCaseSteps>
    <Transition SourceState="Init" TargetState="SystemStart_20"/>
    <Transition SourceState="SystemStart_20" TargetState="WaitOnSPDU_21"/>
    <FSDeviceReceive PDout="PD" PortNum="valid" MCount="0" setSD="1" ChFAckReq="0" CRC="valid"/>
    <Transition SourceState="WaitOnSPDU_21" TargetState="CheckSPDU_22"/>
    <Transition SourceState="CheckSPDU_22" TargetState="PrepareResponse_23"/>
    <Transition SourceState="PrepareResponse_23" TargetState="WaitOnSPDU_24"/>
    <FSDeviceSend PDin="PD" PortNum="valid" DCount="7" SDset="1" DCommErr="0" DTimeout="0" CRC="valid"/>
    <FSDeviceReceive PDout="PD" PortNum="valid" MCount="5" setSD="0" ChFAckReq="0" CRC="invalid"/>
    <Transition SourceState="WaitOnSPDU_24" TargetState="PrepareResponse_25"/>
    <Transition SourceState="PrepareResponse_25" TargetState="WaitOnSPDU_26"/>
    <FSDeviceSend PDin="PD" PortNum="valid" DCount="2" SDset="1" DCommErr="1" DTimeout="0" CRC="valid"/>
    <FSDeviceReceive PDout="PD" PortNum="valid" MCount="1" setSD="0" ChFAckReq="0" CRC="valid"/>
    <Transition SourceState="WaitOnSPDU_26" TargetState="CheckSPDU_27"/>
    <Transition SourceState="CheckSPDU_27" TargetState="PrepareResponse_25"/>
    <Transition SourceState="PrepareResponse_25" TargetState="WaitOnSPDU_26"/>
    <FSDeviceSend PDin="PD" PortNum="valid" DCount="6" SDset="1" DCommErr="1" DTimeout="0" CRC="valid"/>
  </FSDeviceSclTestCaseSteps>
</Testroot>
```

9.2.14 Test script 14

Table 68 defines the test conditions for this test case. The associated XML file contains steps and message parameters for the state flow check in case of no error, MCount = 2, and DCommErr.

Table 68 – FS-Device test script 14

TEST CASE ATTRIBUTES	IDENTIFICATION / REFERENCE
Identification (ID)	SDCI_FSTC_0065
Name	FSTCD_SCLD_FLOW_SETSD0MC2DCE1
Purpose (short)	
Equipment under test (EUT)	FS-Device
Test case version	1.0
Category / type	FS-Device automated SCL protocol test
Specification (clause)	[3] clause 11.3.3, Figure 37 (services); clause 11.5.3, Figure 42 (state chart)
Configuration / setup	See Table 54
TEST CASE	**CONDITIONS / PERFORMANCE**
Purpose (detailed)	Protocol flow in case of distinct error
Precondition	FS-Device waiting for the first message
Procedure	See XML file "IO-Link-Safety_spec_device_final_testsuite_testcase_14.xml"
Test parameter	See Table 54 and XML file
Post condition	–
TEST CASE RESULTS	**CHECK / REACTION**
Evaluation	Comparison of expected and received values according to the XML file
Test passed	Comparison OK
Test failed (examples)	Comparison not OK
Report	Printout of the automated SCL protocol tester <pass/fail>

Content of file "IO-Link-Safety_spec_device_final_testsuite_testcase_14.xml":

```xml
<?xml version="1.0" encoding="UTF-8"?>
<Testroot xsi:noNamespaceSchemaLocation="IO-Link-Safety-Test-Procedure_Types_V1.0.xsd"
xmlns:xsi="http://www.w3.org/2001/XMLSchema-instance" version="1.2" name="tc_14" date="20.11.2018: 14:01:13.944">
  <FSDeviceSclTestCaseSteps>
    <Transition SourceState="Init" TargetState="SystemStart_20"/>
    <Transition SourceState="SystemStart_20" TargetState="WaitOnSPDU_21"/>
    <FSDeviceReceive PDout="PD" PortNum="valid" MCount="2" setSD="0" ChFAckReq="0" CRC="valid"/>
    <Transition SourceState="WaitOnSPDU_21" TargetState="CheckSPDU_22"/>
    <Transition SourceState="CheckSPDU_22" TargetState="PrepareResponse_25"/>
    <Transition SourceState="PrepareResponse_25" TargetState="WaitOnSPDU_26"/>
    <FSDeviceSend PDin="PD" PortNum="valid" DCount="5" SDset="1" DCommErr="1" DTimeout="1" CRC="valid"/>
    <FSDeviceReceive PDout="PD" PortNum="valid" MCount="3" setSD="0" ChFAckReq="0" CRC="valid"/>
    <Transition SourceState="WaitOnSPDU_26" TargetState="CheckSPDU_27"/>
    <Transition SourceState="CheckSPDU_27" TargetState="PrepareResponse_25"/>
    <Transition SourceState="PrepareResponse_25" TargetState="WaitOnSPDU_26"/>
    <FSDeviceSend PDin="PD" PortNum="valid" DCount="4" SDset="1" DCommErr="1" DTimeout="0" CRC="valid"/>
    <FSDeviceReceive PDout="PD" PortNum="valid" MCount="1" setSD="0" ChFAckReq="0" CRC="valid"/>
    <Transition SourceState="WaitOnSPDU_26" TargetState="CheckSPDU_27"/>
    <Transition SourceState="CheckSPDU_27" TargetState="PrepareResponse_25"/>
    <Transition SourceState="PrepareResponse_25" TargetState="WaitOnSPDU_26"/>
    <FSDeviceSend PDin="PD" PortNum="valid" DCount="6" SDset="1" DCommErr="1" DTimeout="0" CRC="valid"/>
  </FSDeviceSclTestCaseSteps>
</Testroot>
```

9.2.15 Test script 15

Table 69 defines the test conditions for this test case. The associated XML file contains steps and message parameters for the state flow check in case of a setSD error, MCount = 0, and DCommErr.

Table 69 – FS-Device test script 15

TEST CASE ATTRIBUTES	IDENTIFICATION / REFERENCE
Identification (ID)	SDCI_FSTC_0066
Name	FSTCD_SCLD_FLOW_SETSD1MC0DCE1
Purpose (short)	
Equipment under test (EUT)	FS-Device
Test case version	1.0
Category / type	FS-Device automated SCL protocol test
Specification (clause)	[3] clause 11.3.3, Figure 37 (services); clause 11.5.3, Figure 42 (state chart)
Configuration / setup	See Table 54
TEST CASE	**CONDITIONS / PERFORMANCE**
Purpose (detailed)	Protocol flow in case of distinct error
Precondition	FS-Device waiting for the first message
Procedure	See XML file "IO-Link-Safety_spec_device_final_testsuite_testcase_15.xml"
Test parameter	See Table 54 and XML file
Post condition	–
TEST CASE RESULTS	**CHECK / REACTION**
Evaluation	Comparison of expected and received values according to the XML file
Test passed	Comparison OK
Test failed (examples)	Comparison not OK
Report	Printout of the automated SCL protocol tester <pass/fail>

Content of file "IO-Link-Safety_spec_device_final_testsuite_testcase_15.xml":

```
<?xml version="1.0" encoding="UTF-8"?>
<Testroot xsi:noNamespaceSchemaLocation="IO-Link-Safety-Test-Procedure_Types_V1.0.xsd"
xmlns:xsi="http://www.w3.org/2001/XMLSchema-instance" version="1.2" name="tc_15" date="20.11.2018: 14:01:13.944">
  <FSDeviceSclTestCaseSteps>
    <Transition SourceState="Init" TargetState="SystemStart_20"/>
    <Transition SourceState="SystemStart_20" TargetState="WaitOnSPDU_21"/>
    <FSDeviceReceive PDout="PD" PortNum="valid" MCount="0" setSD="1" ChFAckReq="0" CRC="valid"/>
    <Transition SourceState="WaitOnSPDU_21" TargetState="CheckSPDU_22"/>
    <Transition SourceState="CheckSPDU_22" TargetState="PrepareResponse_23"/>
    <Transition SourceState="PrepareResponse_23" TargetState="WaitOnSPDU_24"/>
    <FSDeviceSend PDin="PD" PortNum="valid" DCount="7" SDset="1" DCommErr="0" DTimeout="0" CRC="valid"/>
    <FSDeviceReceive PDout="PD" PortNum="valid" MCount="1" setSD="0" ChFAckReq="0" CRC="valid"/>
    <Transition SourceState="WaitOnSPDU_24" TargetState="CheckSPDU_22"/>
    <Transition SourceState="CheckSPDU_22" TargetState="PrepareResponse_23"/>
    <Transition SourceState="PrepareResponse_23" TargetState="WaitOnSPDU_24"/>
    <FSDeviceSend PDin="PD" PortNum="valid" DCount="6" SDset="1" DCommErr="0" DTimeout="0" CRC="valid"/>
    <FSDeviceReceive PDout="PD" PortNum="valid" MCount="2" setSD="0" ChFAckReq="0" CRC="valid"/>
    <Transition SourceState="WaitOnSPDU_24" TargetState="CheckSPDU_22"/>
    <Transition SourceState="CheckSPDU_22" TargetState="PrepareResponse_23"/>
    <Transition SourceState="PrepareResponse_23" TargetState="WaitOnSPDU_24"/>
    <FSDeviceSend PDin="PD" PortNum="valid" DCount="5" SDset="1" DCommErr="0" DTimeout="0" CRC="valid"/>
    <FSDeviceReceive PDout="PD" PortNum="valid" MCount="3" setSD="0" ChFAckReq="0" CRC="valid"/>
    <Transition SourceState="WaitOnSPDU_24" TargetState="CheckSPDU_22"/>
    <Transition SourceState="CheckSPDU_22" TargetState="PrepareResponse_23"/>
    <Transition SourceState="PrepareResponse_23" TargetState="WaitOnSPDU_24"/>
    <FSDeviceSend PDin="PD" PortNum="valid" DCount="4" SDset="0" DCommErr="0" DTimeout="0" CRC="valid"/>
    <FSDeviceReceive PDout="PD" PortNum="valid" MCount="1" setSD="0" ChFAckReq="0" CRC="valid"/>
    <Transition SourceState="WaitOnSPDU_24" TargetState="CheckSPDU_22"/>
```

```
    <Transition SourceState="CheckSPDU_22" TargetState="PrepareResponse_25"/>
    <Transition SourceState="PrepareResponse_25" TargetState="WaitOnSPDU_26"/>
    <FSDeviceSend PDin="PD" PortNum="valid" DCount="6" SDset="1" DCommErr="1" DTimeout="0" CRC="valid"/>
  </FSDeviceSclTestCaseSteps>
</Testroot>
```

9.2.16 Test script 16

Table 70 defines the test conditions for this test case. The associated XML file contains steps and message parameters for the state flow check in case of a setSD error, MCount = 0, and DCommErr.

Table 70 – FS-Device test script 16

TEST CASE ATTRIBUTES	IDENTIFICATION / REFERENCE
Identification (ID)	SDCI_FSTC_0067
Name	FSTCD_SCLD_FLOW_SETSD1MC0DCE1
Purpose (short)	
Equipment under test (EUT)	FS-Device
Test case version	1.0
Category / type	FS-Device automated SCL protocol test
Specification (clause)	[3] clause 11.3.3, Figure 37 (services); clause 11.5.3, Figure 42 (state chart)
Configuration / setup	See Table 54
TEST CASE	**CONDITIONS / PERFORMANCE**
Purpose (detailed)	Protocol flow in case of distinct error
Precondition	FS-Device waiting for the first message
Procedure	See XML file "IO-Link-Safety_spec_device_final_testsuite_testcase_16.xml"
Test parameter	See Table 54 and XML file
Post condition	–
TEST CASE RESULTS	**CHECK / REACTION**
Evaluation	Comparison of expected and received values according to the XML file
Test passed	Comparison OK
Test failed (examples)	Comparison not OK
Report	Printout of the automated SCL protocol tester <pass/fail>

Content of file "IO-Link-Safety_spec_device_final_testsuite_testcase_16.xml":

```xml
<?xml version="1.0" encoding="UTF-8"?>
<Testroot xsi:noNamespaceSchemaLocation="IO-Link-Safety-Test-Procedure_Types_V1.0.xsd"
xmlns:xsi="http://www.w3.org/2001/XMLSchema-instance" version="1.2" name="tc_16" date="20.11.2018: 14:01:13.944">
  <FSDeviceSclTestCaseSteps>
    <Transition SourceState="Init" TargetState="SystemStart_20"/>
    <Transition SourceState="SystemStart_20" TargetState="WaitOnSPDU_21"/>
    <FSDeviceReceive PDout="PD" PortNum="valid" MCount="0" setSD="1" ChFAckReq="0" CRC="valid"/>
    <Transition SourceState="WaitOnSPDU_21" TargetState="CheckSPDU_22"/>
    <Transition SourceState="CheckSPDU_22" TargetState="PrepareResponse_23"/>
    <Transition SourceState="PrepareResponse_23" TargetState="WaitOnSPDU_24"/>
    <FSDeviceSend PDin="PD" PortNum="valid" DCount="7" SDset="1" DCommErr="0" DTimeout="0" CRC="valid"/>
    <FSDeviceReceive PDout="PD" PortNum="valid" MCount="1" setSD="0" ChFAckReq="0" CRC="valid"/>
    <Transition SourceState="WaitOnSPDU_24" TargetState="CheckSPDU_22"/>
    <Transition SourceState="CheckSPDU_22" TargetState="PrepareResponse_23"/>
    <Transition SourceState="PrepareResponse_23" TargetState="WaitOnSPDU_24"/>
    <FSDeviceSend PDin="PD" PortNum="valid" DCount="6" SDset="1" DCommErr="0" DTimeout="0" CRC="valid"/>
    <FSDeviceReceive PDout="PD" PortNum="valid" MCount="2" setSD="0" ChFAckReq="0" CRC="valid"/>
    <Transition SourceState="WaitOnSPDU_24" TargetState="CheckSPDU_22"/>
    <Transition SourceState="CheckSPDU_22" TargetState="PrepareResponse_23"/>
    <Transition SourceState="PrepareResponse_23" TargetState="WaitOnSPDU_24"/>
    <FSDeviceSend PDin="PD" PortNum="valid" DCount="5" SDset="1" DCommErr="0" DTimeout="0" CRC="valid"/>
    <FSDeviceReceive PDout="PD" PortNum="valid" MCount="3" setSD="0" ChFAckReq="0" CRC="valid"/>
    <Transition SourceState="WaitOnSPDU_24" TargetState="CheckSPDU_22"/>
    <Transition SourceState="CheckSPDU_22" TargetState="PrepareResponse_23"/>
    <Transition SourceState="PrepareResponse_23" TargetState="WaitOnSPDU_24"/>
    <FSDeviceSend PDin="PD" PortNum="valid" DCount="4" SDset="0" DCommErr="0" DTimeout="0" CRC="valid"/>
    <FSDeviceReceive PDout="PD" PortNum="valid" MCount="4" setSD="0" ChFAckReq="0" CRC="valid"/>
    <Transition SourceState="WaitOnSPDU_24" TargetState="CheckSPDU_22"/>
```

```
    <Transition SourceState="CheckSPDU_22" TargetState="PrepareResponse_23"/>
    <Transition SourceState="PrepareResponse_23" TargetState="WaitOnSPDU_24"/>
    <FSDeviceSend PDin="PD" PortNum="valid" DCount="3" SDset="0" DCommErr="0" DTimeout="0" CRC="valid"/>
    <FSDeviceReceive PDout="PD" PortNum="valid" MCount="1" setSD="0" ChFAckReq="0" CRC="valid"/>
    <Transition SourceState="WaitOnSPDU_24" TargetState="CheckSPDU_22"/>
    <Transition SourceState="CheckSPDU_22" TargetState="PrepareResponse_25"/>
    <Transition SourceState="PrepareResponse_25" TargetState="WaitOnSPDU_26"/>
    <FSDeviceSend PDin="PD" PortNum="valid" DCount="6" SDset="1" DCommErr="1" DTimeout="0" CRC="valid"/>
  </FSDeviceSclTestCaseSteps>
</Testroot>
```

9.2.17 Test script 17

Table 71 defines the test conditions for this test case. The associated XML file contains steps and message parameters for the state flow check in case of a PortNum error and MCount = 0.

Table 71 – FS-Device test script 17

TEST CASE ATTRIBUTES	IDENTIFICATION / REFERENCE
Identification (ID)	SDCI_FSTC_0068
Name	FSTCD_SCLD_FLOW_PNERRMC0
Purpose (short)	
Equipment under test (EUT)	FS-Device
Test case version	1.0
Category / type	FS-Device automated SCL protocol test
Specification (clause)	[3] clause 11.3.3, Figure 37 (services); clause 11.5.3, Figure 42 (state chart)
Configuration / setup	See Table 54
TEST CASE	**CONDITIONS / PERFORMANCE**
Purpose (detailed)	Protocol flow in case of distinct error
Precondition	FS-Device waiting for the first message
Procedure	See XML file "IO-Link-Safety_spec_device_final_testsuite_testcase_17.xml"
Test parameter	See Table 54 and XML file
Post condition	–
TEST CASE RESULTS	**CHECK / REACTION**
Evaluation	Comparison of expected and received values according to the XML file
Test passed	Comparison OK
Test failed (examples)	Comparison not OK
Report	Printout of the automated SCL protocol tester <pass/fail>

Content of file "IO-Link-Safety_spec_device_final_testsuite_testcase_17.xml":

```
<?xml version="1.0" encoding="UTF-8"?>
<Testroot xsi:noNamespaceSchemaLocation="IO-Link-Safety-Test-Procedure_Types_V1.0.xsd"
xmlns:xsi="http://www.w3.org/2001/XMLSchema-instance" version="1.2" name="tc_17" date="20.11.2018: 14:01:13.944">
  <FSDeviceSclTestCaseSteps>
    <Transition SourceState="Init" TargetState="SystemStart_20"/>
    <Transition SourceState="SystemStart_20" TargetState="WaitOnSPDU_21"/>
    <FSDeviceReceive PDout="PD" PortNum="invalid" MCount="0" setSD="0" ChFAckReq="0" CRC="valid"/>
    <Transition SourceState="WaitOnSPDU_21" TargetState="CheckSPDU_22"/>
    <Transition SourceState="CheckSPDU_22" TargetState="PrepareResponse_25"/>
    <Transition SourceState="PrepareResponse_25" TargetState="WaitOnSPDU_26"/>
    <FSDeviceSend PDin="PD" PortNum="valid" DCount="7" SDset="1" DCommErr="1" DTimeout="1" CRC="valid"/>
  </FSDeviceSclTestCaseSteps>
</Testroot>
```

9.2.18 Test script 18

Table 72 defines the test conditions for this test case. The associated XML file contains steps and message parameters for the state flow check in case of no error, MCount = 2, and Timeout.

Table 72 – FS-Device test script 18

TEST CASE ATTRIBUTES	IDENTIFICATION / REFERENCE
Identification (ID)	SDCI_FSTC_0069
Name	FSTCD_SCLD_FLOW_SETSD0MC2TO
Purpose (short)	
Equipment under test (EUT)	FS-Device
Test case version	1.0
Category / type	FS-Device automated SCL protocol test
Specification (clause)	[3] clause 11.3.3, Figure 37 (services); clause 11.5.3, Figure 42 (state chart)
Configuration / setup	See Table 54
TEST CASE	**CONDITIONS / PERFORMANCE**
Purpose (detailed)	Protocol flow in case of distinct error
Precondition	FS-Device waiting for the first message
Procedure	See XML file "IO-Link-Safety_spec_device_final_testsuite_testcase_18.xml"
Test parameter	See Table 54 and XML file
Post condition	–
TEST CASE RESULTS	**CHECK / REACTION**
Evaluation	Comparison of expected and received values according to the XML file
Test passed	Comparison OK
Test failed (examples)	Comparison not OK
Report	Printout of the automated SCL protocol tester <pass/fail>

Content of file "IO-Link-Safety_spec_device_final_testsuite_testcase_18.xml":

```
<?xml version="1.0" encoding="UTF-8"?>
<Testroot xsi:noNamespaceSchemaLocation="IO-Link-Safety-Test-Procedure_Types_V1.0.xsd"
xmlns:xsi="http://www.w3.org/2001/XMLSchema-instance" version="1.2" name="tc_18" date="20.11.2018: 14:01:13.944">
  <FSDeviceSclTestCaseSteps>
    <Transition SourceState="Init" TargetState="SystemStart_20"/>
    <Transition SourceState="SystemStart_20" TargetState="WaitOnSPDU_21"/>
    <FSDeviceReceive PDout="PD" PortNum="valid" MCount="2" setSD="0" ChFAckReq="0" CRC="valid"/>
    <Transition SourceState="WaitOnSPDU_21" TargetState="CheckSPDU_22"/>
    <Transition SourceState="CheckSPDU_22" TargetState="PrepareResponse_25"/>
    <Transition SourceState="PrepareResponse_25" TargetState="WaitOnSPDU_26"/>
    <FSDeviceSend PDin="PD" PortNum="valid" DCount="5" SDset="1" DCommErr="1" DTimeout="1" CRC="valid"/>
    <FSDeviceReceive PDout="PD" PortNum="valid" MCount="0" setSD="0" ChFAckReq="0" CRC="invalid"/>
    <Transition SourceState="WaitOnSPDU_26" TargetState="CheckSPDU_27"/>
    <Transition SourceState="CheckSPDU_27" TargetState="PrepareResponse_25"/>
    <Transition SourceState="PrepareResponse_25" TargetState="WaitOnSPDU_26"/>
    <FSDeviceSend PDin="PD" PortNum="valid" DCount="7" SDset="1" DCommErr="1" DTimeout="0" CRC="valid"/>
  </FSDeviceSclTestCaseSteps>
</Testroot>
```

9.2.19 Test script 19

Table 73 defines the test conditions for this test case. The associated XML file contains steps and message parameters for the state flow check in case of a setSD error, MCount = 0, and DCommErr.

Table 73 – FS-Device test script 19

TEST CASE ATTRIBUTES	IDENTIFICATION / REFERENCE
Identification (ID)	SDCI_FSTC_0070
Name	FSTCD_SCLD_FLOW_SETSD1MC0DCE1
Purpose (short)	
Equipment under test (EUT)	FS-Device
Test case version	1.0
Category / type	FS-Device automated SCL protocol test
Specification (clause)	[3] clause 11.3.3, Figure 37 (services); clause 11.5.3, Figure 42 (state chart)
Configuration / setup	See Table 54
TEST CASE	**CONDITIONS / PERFORMANCE**
Purpose (detailed)	Protocol flow in case of distinct error
Precondition	FS-Device waiting for the first message
Procedure	See XML file "IO-Link-Safety_spec_device_final_testsuite_testcase_19.xml"
Test parameter	See Table 54 and XML file
Post condition	–
TEST CASE RESULTS	**CHECK / REACTION**
Evaluation	Comparison of expected and received values according to the XML file
Test passed	Comparison OK
Test failed (examples)	Comparison not OK
Report	Printout of the automated SCL protocol tester <pass/fail>

Content of file "IO-Link-Safety_spec_device_final_testsuite_testcase_19.xml":

```xml
<?xml version="1.0" encoding="UTF-8"?>
<Testroot xsi:noNamespaceSchemaLocation="IO-Link-Safety-Test-Procedure_Types_V1.0.xsd"
xmlns:xsi="http://www.w3.org/2001/XMLSchema-instance" version="1.2" name="tc_19" date="20.11.2018: 14:01:13.944">
  <FSDeviceSclTestCaseSteps>
    <Transition SourceState="Init" TargetState="SystemStart_20"/>
    <Transition SourceState="SystemStart_20" TargetState="WaitOnSPDU_21"/>
    <FSDeviceReceive PDout="PD" PortNum="valid" MCount="0" setSD="1" ChFAckReq="0" CRC="valid"/>
    <Transition SourceState="WaitOnSPDU_21" TargetState="CheckSPDU_22"/>
    <Transition SourceState="CheckSPDU_22" TargetState="PrepareResponse_23"/>
    <Transition SourceState="PrepareResponse_23" TargetState="WaitOnSPDU_24"/>
    <FSDeviceSend PDin="PD" PortNum="valid" DCount="7" SDset="1" DCommErr="0" DTimeout="0" CRC="valid"/>
    <FSDeviceReceive PDout="PD" PortNum="valid" MCount="5" setSD="0" ChFAckReq="0" CRC="invalid"/>
    <Transition SourceState="WaitOnSPDU_24" TargetState="PrepareResponse_25"/>
    <Transition SourceState="PrepareResponse_25" TargetState="WaitOnSPDU_26"/>
    <FSDeviceSend PDin="PD" PortNum="valid" DCount="2" SDset="1" DCommErr="1" DTimeout="0" CRC="valid"/>
    <FSDeviceReceive PDout="PD" PortNum="valid" MCount="7" setSD="0" ChFAckReq="0" CRC="invalid"/>
    <Transition SourceState="WaitOnSPDU_26" TargetState="CheckSPDU_27"/>
    <Transition SourceState="CheckSPDU_27" TargetState="PrepareResponse_25"/>
    <Transition SourceState="PrepareResponse_25" TargetState="WaitOnSPDU_26"/>
    <FSDeviceSend PDin="PD" PortNum="valid" DCount="0" SDset="1" DCommErr="1" DTimeout="0" CRC="valid"/>
  </FSDeviceSclTestCaseSteps>
</Testroot>
```

9.2.20 Test script 20

Table 74 defines the test conditions for this test case. The associated XML file contains steps and message parameters for the state flow check in case of a setSD error, MCount = 0, and DCommErr.

Table 74 – FS-Device test script 20

TEST CASE ATTRIBUTES	IDENTIFICATION / REFERENCE
Identification (ID)	SDCI_FSTC_0071
Name	FSTCD_SCLD_FLOW_SETSD1MC0DCE1
Purpose (short)	
Equipment under test (EUT)	FS-Device
Test case version	1.0
Category / type	FS-Device automated SCL protocol test
Specification (clause)	[3] clause 11.3.3, Figure 37 (services); clause 11.5.3, Figure 42 (state chart)
Configuration / setup	See Table 54
TEST CASE	**CONDITIONS / PERFORMANCE**
Purpose (detailed)	Protocol flow in case of distinct error
Precondition	FS-Device waiting for the first message
Procedure	See XML file "IO-Link-Safety_spec_device_final_testsuite_testcase_20.xml"
Test parameter	See Table 54 and XML file
Post condition	–
TEST CASE RESULTS	**CHECK / REACTION**
Evaluation	Comparison of expected and received values according to the XML file
Test passed	Comparison OK
Test failed (examples)	Comparison not OK
Report	Printout of the automated SCL protocol tester <pass/fail>

Content of file "IO-Link-Safety_spec_device_final_testsuite_testcase_20.xml":

```xml
<?xml version="1.0" encoding="UTF-8"?>
<Testroot xsi:noNamespaceSchemaLocation="IO-Link-Safety-Test-Procedure_Types_V1.0.xsd"
xmlns:xsi="http://www.w3.org/2001/XMLSchema-instance" version="1.2" name="tc_20" date="20.11.2018: 14:01:13.944">
  <FSDeviceSclTestCaseSteps>
    <Transition SourceState="Init" TargetState="SystemStart_20"/>
    <Transition SourceState="SystemStart_20" TargetState="WaitOnSPDU_21"/>
    <FSDeviceReceive PDout="PD" PortNum="valid" MCount="0" setSD="1" ChFAckReq="0" CRC="valid"/>
    <Transition SourceState="WaitOnSPDU_21" TargetState="CheckSPDU_22"/>
    <Transition SourceState="CheckSPDU_22" TargetState="PrepareResponse_23"/>
    <Transition SourceState="PrepareResponse_23" TargetState="WaitOnSPDU_24"/>
    <FSDeviceSend PDin="PD" PortNum="valid" DCount="7" SDset="1" DCommErr="0" DTimeout="0" CRC="valid"/>
    <FSDeviceReceive PDout="PD" PortNum="valid" MCount="6" setSD="0" ChFAckReq="0" CRC="invalid"/>
    <Transition SourceState="WaitOnSPDU_24" TargetState="PrepareResponse_25"/>
    <Transition SourceState="PrepareResponse_25" TargetState="WaitOnSPDU_26"/>
    <FSDeviceSend PDin="PD" PortNum="valid" DCount="1" SDset="1" DCommErr="1" DTimeout="0" CRC="valid"/>
    <FSDeviceReceive PDout="PD" PortNum="valid" MCount="0" setSD="0" ChFAckReq="0" CRC="invalid"/>
    <Transition SourceState="WaitOnSPDU_26" TargetState="CheckSPDU_27"/>
    <Transition SourceState="CheckSPDU_27" TargetState="PrepareResponse_25"/>
    <Transition SourceState="PrepareResponse_25" TargetState="WaitOnSPDU_26"/>
    <FSDeviceSend PDin="PD" PortNum="valid" DCount="7" SDset="1" DCommErr="1" DTimeout="0" CRC="valid"/>
  </FSDeviceSclTestCaseSteps>
</Testroot>
```

9.2.21 Test script 21

Table 75 defines the test conditions for this test case. The associated XML file contains steps and message parameters for the state flow check in case of a setSD error, MCount = 0, and DCommErr.

Table 75 – FS-Device test script 21

TEST CASE ATTRIBUTES	IDENTIFICATION / REFERENCE
Identification (ID)	SDCI_FSTC_0072
Name	FSTCD_SCLD_FLOW_SETSD1MC0DCE1
Purpose (short)	
Equipment under test (EUT)	FS-Device
Test case version	1.0
Category / type	FS-Device automated SCL protocol test
Specification (clause)	[3] clause 11.3.3, Figure 37 (services); clause 11.5.3, Figure 42 (state chart)
Configuration / setup	See Table 54
TEST CASE	**CONDITIONS / PERFORMANCE**
Purpose (detailed)	Protocol flow in case of distinct error
Precondition	FS-Device waiting for the first message
Procedure	See XML file "IO-Link-Safety_spec_device_final_testsuite_testcase_21.xml"
Test parameter	See Table 54 and XML file
Post condition	–
TEST CASE RESULTS	**CHECK / REACTION**
Evaluation	Comparison of expected and received values according to the XML file
Test passed	Comparison OK
Test failed (examples)	Comparison not OK
Report	Printout of the automated SCL protocol tester <pass/fail>

Content of file "IO-Link-Safety_spec_device_final_testsuite_testcase_21.xml":

```xml
<?xml version="1.0" encoding="UTF-8"?>
<Testroot xsi:noNamespaceSchemaLocation="IO-Link-Safety-Test-Procedure_Types_V1.0.xsd"
xmlns:xsi="http://www.w3.org/2001/XMLSchema-instance" version="1.2" name="tc_21" date="20.11.2018: 14:01:13.944">
  <FSDeviceSclTestCaseSteps>
    <Transition SourceState="Init" TargetState="SystemStart_20"/>
    <Transition SourceState="SystemStart_20" TargetState="WaitOnSPDU_21"/>
    <FSDeviceReceive PDout="PD" PortNum="valid" MCount="0" setSD="1" ChFAckReq="0" CRC="valid"/>
    <Transition SourceState="WaitOnSPDU_21" TargetState="CheckSPDU_22"/>
    <Transition SourceState="CheckSPDU_22" TargetState="PrepareResponse_23"/>
    <Transition SourceState="PrepareResponse_23" TargetState="WaitOnSPDU_24"/>
    <FSDeviceSend PDin="PD" PortNum="valid" DCount="7" SDset="1" DCommErr="0" DTimeout="0" CRC="valid"/>
    <FSDeviceReceive PDout="PD" PortNum="valid" MCount="6" setSD="0" ChFAckReq="0" CRC="invalid"/>
    <Transition SourceState="WaitOnSPDU_24" TargetState="PrepareResponse_25"/>
    <Transition SourceState="PrepareResponse_25" TargetState="WaitOnSPDU_26"/>
    <FSDeviceSend PDin="PD" PortNum="valid" DCount="1" SDset="1" DCommErr="1" DTimeout="0" CRC="valid"/>
    <FSDeviceReceive PDout="PD" PortNum="valid" MCount="7" setSD="0" ChFAckReq="0" CRC="invalid"/>
    <Transition SourceState="WaitOnSPDU_26" TargetState="CheckSPDU_27"/>
    <Transition SourceState="CheckSPDU_27" TargetState="PrepareResponse_25"/>
    <Transition SourceState="PrepareResponse_25" TargetState="WaitOnSPDU_26"/>
    <FSDeviceSend PDin="PD" PortNum="valid" DCount="0" SDset="1" DCommErr="1" DTimeout="0" CRC="valid"/>
  </FSDeviceSclTestCaseSteps>
</Testroot>
```

9.2.22 Test script 22

Table 76 defines the test conditions for this test case. The associated XML file contains steps and message parameters for the state flow check in case of a setSD error, MCount = 0, and DCommErr.

Table 76 – FS-Device test script 22

TEST CASE ATTRIBUTES	IDENTIFICATION / REFERENCE
Identification (ID)	SDCI_FSTC_0073
Name	FSTCD_SCLD_FLOW_SETSD1MC0DCE1
Purpose (short)	
Equipment under test (EUT)	FS-Device
Test case version	1.0
Category / type	FS-Device automated SCL protocol test
Specification (clause)	[3] clause 11.3.3, Figure 37 (services); clause 11.5.3, Figure 42 (state chart)
Configuration / setup	See Table 54
TEST CASE	**CONDITIONS / PERFORMANCE**
Purpose (detailed)	Protocol flow in case of distinct error
Precondition	FS-Device waiting for the first message
Procedure	See XML file "IO-Link-Safety_spec_device_final_testsuite_testcase_22.xml"
Test parameter	See Table 54 and XML file
Post condition	–
TEST CASE RESULTS	**CHECK / REACTION**
Evaluation	Comparison of expected and received values according to the XML file
Test passed	Comparison OK
Test failed (examples)	Comparison not OK
Report	Printout of the automated SCL protocol tester <pass/fail>

Content of file "IO-Link-Safety_spec_device_final_testsuite_testcase_22.xml":

```xml
<?xml version="1.0" encoding="UTF-8"?>
<Testroot xsi:noNamespaceSchemaLocation="IO-Link-Safety-Test-Procedure_Types_V1.0.xsd"
xmlns:xsi="http://www.w3.org/2001/XMLSchema-instance" version="1.2" name="tc_22" date="20.11.2018: 14:01:13.945">
  <FSDeviceSclTestCaseSteps>
    <Transition SourceState="Init" TargetState="SystemStart_20"/>
    <Transition SourceState="SystemStart_20" TargetState="WaitOnSPDU_21"/>
    <FSDeviceReceive PDout="PD" PortNum="valid" MCount="0" setSD="1" ChFAckReq="0" CRC="valid"/>
    <Transition SourceState="WaitOnSPDU_21" TargetState="CheckSPDU_22"/>
    <Transition SourceState="CheckSPDU_22" TargetState="PrepareResponse_23"/>
    <Transition SourceState="PrepareResponse_23" TargetState="WaitOnSPDU_24"/>
    <FSDeviceSend PDin="PD" PortNum="valid" DCount="7" SDset="1" DCommErr="0" DTimeout="0" CRC="valid"/>
    <FSDeviceReceive PDout="PD" PortNum="valid" MCount="7" setSD="0" ChFAckReq="0" CRC="invalid"/>
    <Transition SourceState="WaitOnSPDU_24" TargetState="PrepareResponse_25"/>
    <Transition SourceState="PrepareResponse_25" TargetState="WaitOnSPDU_26"/>
    <FSDeviceSend PDin="PD" PortNum="valid" DCount="0" SDset="1" DCommErr="1" DTimeout="0" CRC="valid"/>
    <FSDeviceReceive PDout="PD" PortNum="valid" MCount="0" setSD="0" ChFAckReq="0" CRC="invalid"/>
    <Transition SourceState="WaitOnSPDU_26" TargetState="CheckSPDU_27"/>
    <Transition SourceState="CheckSPDU_27" TargetState="PrepareResponse_25"/>
    <Transition SourceState="PrepareResponse_25" TargetState="WaitOnSPDU_26"/>
    <FSDeviceSend PDin="PD" PortNum="valid" DCount="7" SDset="1" DCommErr="1" DTimeout="0" CRC="valid"/>
  </FSDeviceSclTestCaseSteps>
</Testroot>
```

9.2.23 Test script 23

Table 77 defines the test conditions for this test case. The associated XML file contains steps and message parameters for the state flow check in case of a setSD error, MCount = 1, and DCommErr.

Table 77 – FS-Device test script 23

TEST CASE ATTRIBUTES	IDENTIFICATION / REFERENCE
Identification (ID)	SDCI_FSTC_0074
Name	FSTCD_SCLD_FLOW_SETSD1MC1DCE1
Purpose (short)	
Equipment under test (EUT)	FS-Device
Test case version	1.0
Category / type	FS-Device automated SCL protocol test
Specification (clause)	[3] clause 11.3.3, Figure 37 (services); clause 11.5.3, Figure 42 (state chart)
Configuration / setup	See Table 54
TEST CASE	**CONDITIONS / PERFORMANCE**
Purpose (detailed)	Protocol flow in case of distinct error
Precondition	FS-Device waiting for the first message
Procedure	See XML file "IO-Link-Safety_spec_device_final_testsuite_testcase_23.xml"
Test parameter	See Table 54 and XML file
Post condition	–
TEST CASE RESULTS	**CHECK / REACTION**
Evaluation	Comparison of expected and received values according to the XML file
Test passed	Comparison OK
Test failed (examples)	Comparison not OK
Report	Printout of the automated SCL protocol tester <pass/fail>

Content of file "IO-Link-Safety_spec_device_final_testsuite_testcase_23.xml":

```xml
<?xml version="1.0" encoding="UTF-8"?>
<Testroot xsi:noNamespaceSchemaLocation="IO-Link-Safety-Test-Procedure_Types_V1.0.xsd"
xmlns:xsi="http://www.w3.org/2001/XMLSchema-instance" version="1.2" name="tc_23" date="20.11.2018: 14:01:13.945">
  <FSDeviceSclTestCaseSteps>
    <Transition SourceState="Init" TargetState="SystemStart_20"/>
    <Transition SourceState="SystemStart_20" TargetState="WaitOnSPDU_21"/>
    <FSDeviceReceive PDout="PD" PortNum="valid" MCount="1" setSD="0" ChFAckReq="0" CRC="valid"/>
    <Transition SourceState="WaitOnSPDU_21" TargetState="CheckSPDU_22"/>
    <Transition SourceState="CheckSPDU_22" TargetState="PrepareResponse_25"/>
    <Transition SourceState="PrepareResponse_25" TargetState="WaitOnSPDU_26"/>
    <FSDeviceSend PDin="PD" PortNum="valid" DCount="6" SDset="1" DCommErr="1" DTimeout="1" CRC="valid"/>
    <FSDeviceReceive PDout="PD" PortNum="valid" MCount="0" setSD="0" ChFAckReq="0" CRC="valid"/>
    <Transition SourceState="WaitOnSPDU_26" TargetState="CheckSPDU_27"/>
    <Transition SourceState="CheckSPDU_27" TargetState="PrepareResponse_25"/>
    <Transition SourceState="PrepareResponse_25" TargetState="WaitOnSPDU_26"/>
    <FSDeviceSend PDin="PD" PortNum="valid" DCount="7" SDset="1" DCommErr="1" DTimeout="0" CRC="valid"/>
    <FSDeviceReceive PDout="PD" PortNum="valid" MCount="0" setSD="0" ChFAckReq="0" CRC="valid"/>
    <Transition SourceState="WaitOnSPDU_26" TargetState="WaitOnSPDU_26"/>
  </FSDeviceSclTestCaseSteps>
</Testroot>
```

9.2.24 Test script 24

Table 78 defines the test conditions for this test case. The associated XML file contains steps and message parameters for the state flow check in case of a setSD error, MCount = 1, and DCommErr.

Table 78 – FS-Device test script 24

TEST CASE ATTRIBUTES	IDENTIFICATION / REFERENCE
Identification (ID)	SDCI_FSTC_0075
Name	FSTCD_SCLD_FLOW_SETSD1MC1DCE1
Purpose (short)	
Equipment under test (EUT)	FS-Device
Test case version	1.0
Category / type	FS-Device automated SCL protocol test
Specification (clause)	[3] clause 11.3.3, Figure 37 (services); clause 11.5.3, Figure 42 (state chart)
Configuration / setup	See Table 54
TEST CASE	**CONDITIONS / PERFORMANCE**
Purpose (detailed)	Protocol flow in case of distinct error
Precondition	FS-Device waiting for the first message
Procedure	See XML file "IO-Link-Safety_spec_device_final_testsuite_testcase_24.xml"
Test parameter	See Table 54 and XML file
Post condition	–
TEST CASE RESULTS	**CHECK / REACTION**
Evaluation	Comparison of expected and received values according to the XML file
Test passed	Comparison OK
Test failed (examples)	Comparison not OK
Report	Printout of the automated SCL protocol tester <pass/fail>

Content of file "IO-Link-Safety_spec_device_final_testsuite_testcase_24.xml":

```xml
<?xml version="1.0" encoding="UTF-8"?>
<Testroot xsi:noNamespaceSchemaLocation="IO-Link-Safety-Test-Procedure_Types_V1.0.xsd"
xmlns:xsi="http://www.w3.org/2001/XMLSchema-instance" version="1.2" name="tc_24" date="20.11.2018: 14:01:13.945">
  <FSDeviceSclTestCaseSteps>
    <Transition SourceState="Init" TargetState="SystemStart_20"/>
    <Transition SourceState="SystemStart_20" TargetState="WaitOnSPDU_21"/>
    <FSDeviceReceive PDout="PD" PortNum="valid" MCount="1" setSD="0" ChFAckReq="0" CRC="valid"/>
    <Transition SourceState="WaitOnSPDU_21" TargetState="CheckSPDU_22"/>
    <Transition SourceState="CheckSPDU_22" TargetState="PrepareResponse_25"/>
    <Transition SourceState="PrepareResponse_25" TargetState="WaitOnSPDU_26"/>
    <FSDeviceSend PDin="PD" PortNum="valid" DCount="6" SDset="1" DCommErr="1" DTimeout="1" CRC="valid"/>
    <FSDeviceReceive PDout="PD" PortNum="valid" MCount="0" setSD="0" ChFAckReq="0" CRC="valid"/>
    <Transition SourceState="WaitOnSPDU_26" TargetState="CheckSPDU_27"/>
    <Transition SourceState="CheckSPDU_27" TargetState="PrepareResponse_25"/>
    <Transition SourceState="PrepareResponse_25" TargetState="WaitOnSPDU_26"/>
    <FSDeviceSend PDin="PD" PortNum="valid" DCount="7" SDset="1" DCommErr="1" DTimeout="0" CRC="valid"/>
    <FSDeviceReceive PDout="PD" PortNum="invalid" MCount="1" setSD="0" ChFAckReq="0" CRC="valid"/>
    <Transition SourceState="WaitOnSPDU_26" TargetState="CheckSPDU_27"/>
    <Transition SourceState="CheckSPDU_27" TargetState="PrepareResponse_25"/>
    <Transition SourceState="PrepareResponse_25" TargetState="WaitOnSPDU_26"/>
    <FSDeviceSend PDin="PD" PortNum="valid" DCount="6" SDset="1" DCommErr="1" DTimeout="0" CRC="valid"/>
  </FSDeviceSclTestCaseSteps>
</Testroot>
```

9.2.25 Test script 25

Table 79 defines the test conditions for this test case. The associated XML file contains steps and message parameters for the state flow check in case of no error, MCount = 1, and Timeout.

Table 79 – FS-Device test script 25

TEST CASE ATTRIBUTES	IDENTIFICATION / REFERENCE
Identification (ID)	SDCI_FSTC_0076
Name	FSTCD_SCLD_FLOW_SETSD0MC1TO
Purpose (short)	
Equipment under test (EUT)	FS-Device
Test case version	1.0
Category / type	FS-Device automated SCL protocol test
Specification (clause)	[3] clause 11.3.3, Figure 37 (services); clause 11.5.3, Figure 42 (state chart)
Configuration / setup	See Table 54
TEST CASE	**CONDITIONS / PERFORMANCE**
Purpose (detailed)	Protocol flow in case of distinct error
Precondition	FS-Device waiting for the first message
Procedure	See XML file "IO-Link-Safety_spec_device_final_testsuite_testcase_25.xml"
Test parameter	See Table 54 and XML file
Post condition	–
TEST CASE RESULTS	**CHECK / REACTION**
Evaluation	Comparison of expected and received values according to the XML file
Test passed	Comparison OK
Test failed (examples)	Comparison not OK
Report	Printout of the automated SCL protocol tester <pass/fail>

Content of file "IO-Link-Safety_spec_device_final_testsuite_testcase_25.xml":

```xml
<?xml version="1.0" encoding="UTF-8"?>
<Testroot xsi:noNamespaceSchemaLocation="IO-Link-Safety-Test-Procedure_Types_V1.0.xsd"
xmlns:xsi="http://www.w3.org/2001/XMLSchema-instance" version="1.2" name="tc_25" date="20.11.2018: 14:01:13.945">
  <FSDeviceSclTestCaseSteps>
    <Transition SourceState="Init" TargetState="SystemStart_20"/>
    <Transition SourceState="SystemStart_20" TargetState="WaitOnSPDU_21"/>
    <FSDeviceReceive PDout="PD" PortNum="valid" MCount="1" setSD="0" ChFAckReq="0" CRC="valid"/>
    <Transition SourceState="WaitOnSPDU_21" TargetState="CheckSPDU_22"/>
    <Transition SourceState="CheckSPDU_22" TargetState="PrepareResponse_25"/>
    <Transition SourceState="PrepareResponse_25" TargetState="WaitOnSPDU_26"/>
    <FSDeviceSend PDin="PD" PortNum="valid" DCount="6" SDset="1" DCommErr="1" DTimeout="1" CRC="valid"/>
    <FSDeviceReceive PDout="PD" PortNum="valid" MCount="2" setSD="0" ChFAckReq="0" CRC="valid"/>
    <Transition SourceState="WaitOnSPDU_26" TargetState="CheckSPDU_27"/>
    <Transition SourceState="CheckSPDU_27" TargetState="PrepareResponse_25"/>
    <Transition SourceState="PrepareResponse_25" TargetState="WaitOnSPDU_26"/>
    <FSDeviceSend PDin="PD" PortNum="valid" DCount="5" SDset="1" DCommErr="1" DTimeout="0" CRC="valid"/>
    <FSDeviceReceive PDout="PD" PortNum="valid" MCount="2" setSD="0" ChFAckReq="0" CRC="valid"/>
    <Transition SourceState="WaitOnSPDU_26" TargetState="WaitOnSPDU_26"/>
  </FSDeviceSclTestCaseSteps>
</Testroot>
```

9.2.26 Test script 26

Table 80 defines the test conditions for this test case. The associated XML file contains steps and message parameters for the state flow check in case of no error, MCount = 1, and Timeout.

Table 80 – FS-Device test script 26

TEST CASE ATTRIBUTES	IDENTIFICATION / REFERENCE
Identification (ID)	SDCI_FSTC_0077
Name	FSTCD_SCLD_FLOW_SETSD0MC1TO
Purpose (short)	
Equipment under test (EUT)	FS-Device
Test case version	1.0
Category / type	FS-Device automated SCL protocol test
Specification (clause)	[3] clause 11.3.3, Figure 37 (services); clause 11.5.3, Figure 42 (state chart)
Configuration / setup	See Table 54
TEST CASE	**CONDITIONS / PERFORMANCE**
Purpose (detailed)	Protocol flow in case of distinct error
Precondition	FS-Device waiting for the first message
Procedure	See XML file "IO-Link-Safety_spec_device_final_testsuite_testcase_26.xml"
Test parameter	See Table 54 and XML file
Post condition	–
TEST CASE RESULTS	**CHECK / REACTION**
Evaluation	Comparison of expected and received values according to the XML file
Test passed	Comparison OK
Test failed (examples)	Comparison not OK
Report	Printout of the automated SCL protocol tester <pass/fail>

Content of file "IO-Link-Safety_spec_device_final_testsuite_testcase_26.xml":

```xml
<?xml version="1.0" encoding="UTF-8"?>
<Testroot xsi:noNamespaceSchemaLocation="IO-Link-Safety-Test-Procedure_Types_V1.0.xsd"
xmlns:xsi="http://www.w3.org/2001/XMLSchema-instance" version="1.2" name="tc_26" date="20.11.2018: 14:01:13.945">
  <FSDeviceSclTestCaseSteps>
    <Transition SourceState="Init" TargetState="SystemStart_20"/>
    <Transition SourceState="SystemStart_20" TargetState="WaitOnSPDU_21"/>
    <FSDeviceReceive PDout="PD" PortNum="valid" MCount="1" setSD="0" ChFAckReq="0" CRC="valid"/>
    <Transition SourceState="WaitOnSPDU_21" TargetState="CheckSPDU_22"/>
    <Transition SourceState="CheckSPDU_22" TargetState="PrepareResponse_25"/>
    <Transition SourceState="PrepareResponse_25" TargetState="WaitOnSPDU_26"/>
    <FSDeviceSend PDin="PD" PortNum="valid" DCount="6" SDset="1" DCommErr="1" DTimeout="1" CRC="valid"/>
    <FSDeviceReceive PDout="PD" PortNum="valid" MCount="2" setSD="0" ChFAckReq="0" CRC="valid"/>
    <Transition SourceState="WaitOnSPDU_26" TargetState="CheckSPDU_27"/>
    <Transition SourceState="CheckSPDU_27" TargetState="PrepareResponse_25"/>
    <Transition SourceState="PrepareResponse_25" TargetState="WaitOnSPDU_26"/>
    <FSDeviceSend PDin="PD" PortNum="valid" DCount="5" SDset="1" DCommErr="1" DTimeout="0" CRC="valid"/>
    <FSDeviceReceive PDout="PD" PortNum="invalid" MCount="0" setSD="0" ChFAckReq="0" CRC="valid"/>
    <Transition SourceState="WaitOnSPDU_26" TargetState="CheckSPDU_27"/>
    <Transition SourceState="CheckSPDU_27" TargetState="PrepareResponse_25"/>
    <Transition SourceState="PrepareResponse_25" TargetState="WaitOnSPDU_26"/>
    <FSDeviceSend PDin="PD" PortNum="valid" DCount="7" SDset="1" DCommErr="1" DTimeout="0" CRC="valid"/>
  </FSDeviceSclTestCaseSteps>
</Testroot>
```

9.2.27 Test script 27

Table 81 defines the test conditions for this test case. The associated XML file contains steps and message parameters for the state flow check in case of no error, MCount = 1, and Timeout.

Table 81 – FS-Device test script 27

TEST CASE ATTRIBUTES	IDENTIFICATION / REFERENCE
Identification (ID)	SDCI_FSTC_0078
Name	FSTCD_SCLD_FLOW_SETSD0MC1TO
Purpose (short)	
Equipment under test (EUT)	FS-Device
Test case version	1.0
Category / type	FS-Device automated SCL protocol test
Specification (clause)	[3] clause 11.3.3, Figure 37 (services); clause 11.5.3, Figure 42 (state chart)
Configuration / setup	See Table 54
TEST CASE	**CONDITIONS / PERFORMANCE**
Purpose (detailed)	Protocol flow in case of distinct error
Precondition	FS-Device waiting for the first message
Procedure	See XML file "IO-Link-Safety_spec_device_final_testsuite_testcase_27.xml"
Test parameter	See Table 54 and XML file
Post condition	–
TEST CASE RESULTS	**CHECK / REACTION**
Evaluation	Comparison of expected and received values according to the XML file
Test passed	Comparison OK
Test failed (examples)	Comparison not OK
Report	Printout of the automated SCL protocol tester <pass/fail>

Content of file "IO-Link-Safety_spec_device_final_testsuite_testcase_27.xml":

```xml
<?xml version="1.0" encoding="UTF-8"?>
<Testroot xsi:noNamespaceSchemaLocation="IO-Link-Safety-Test-Procedure_Types_V1.0.xsd"
xmlns:xsi="http://www.w3.org/2001/XMLSchema-instance" version="1.2" name="tc_27" date="20.11.2018: 14:01:13.945">
  <FSDeviceSclTestCaseSteps>
    <Transition SourceState="Init" TargetState="SystemStart_20"/>
    <Transition SourceState="SystemStart_20" TargetState="WaitOnSPDU_21"/>
    <FSDeviceReceive PDout="PD" PortNum="valid" MCount="1" setSD="0" ChFAckReq="0" CRC="valid"/>
    <Transition SourceState="WaitOnSPDU_21" TargetState="CheckSPDU_22"/>
    <Transition SourceState="CheckSPDU_22" TargetState="PrepareResponse_25"/>
    <Transition SourceState="PrepareResponse_25" TargetState="WaitOnSPDU_26"/>
    <FSDeviceSend PDin="PD" PortNum="valid" DCount="6" SDset="1" DCommErr="1" DTimeout="1" CRC="valid"/>
    <FSDeviceReceive PDout="PD" PortNum="valid" MCount="2" setSD="0" ChFAckReq="0" CRC="valid"/>
    <Transition SourceState="WaitOnSPDU_26" TargetState="CheckSPDU_27"/>
    <Transition SourceState="CheckSPDU_27" TargetState="PrepareResponse_25"/>
    <Transition SourceState="PrepareResponse_25" TargetState="WaitOnSPDU_26"/>
    <FSDeviceSend PDin="PD" PortNum="valid" DCount="5" SDset="1" DCommErr="1" DTimeout="0" CRC="valid"/>
    <FSDeviceReceive PDout="PD" PortNum="invalid" MCount="3" setSD="0" ChFAckReq="0" CRC="valid"/>
    <Transition SourceState="WaitOnSPDU_26" TargetState="CheckSPDU_27"/>
    <Transition SourceState="CheckSPDU_27" TargetState="PrepareResponse_25"/>
    <Transition SourceState="PrepareResponse_25" TargetState="WaitOnSPDU_26"/>
    <FSDeviceSend PDin="PD" PortNum="valid" DCount="4" SDset="1" DCommErr="1" DTimeout="0" CRC="valid"/>
  </FSDeviceSclTestCaseSteps>
</Testroot>
```

9.2.28 Test script 28

Table 82 defines the test conditions for this test case. The associated XML file contains steps and message parameters for the state flow check in case of no error, MCount = 2, and Timeout.

Table 82 – FS-Device test script 28

TEST CASE ATTRIBUTES	IDENTIFICATION / REFERENCE
Identification (ID)	SDCI_FSTC_0079
Name	FSTCD_SCLD_FLOW_SETSD0MC2TO
Purpose (short)	
Equipment under test (EUT)	FS-Device
Test case version	1.0
Category / type	FS-Device automated SCL protocol test
Specification (clause)	[3] clause 11.3.3, Figure 37 (services); clause 11.5.3, Figure 42 (state chart)
Configuration / setup	See Table 54
TEST CASE	**CONDITIONS / PERFORMANCE**
Purpose (detailed)	Protocol flow in case of distinct error
Precondition	FS-Device waiting for the first message
Procedure	See XML file "IO-Link-Safety_spec_device_final_testsuite_testcase_28.xml"
Test parameter	See Table 54 and XML file
Post condition	–
TEST CASE RESULTS	**CHECK / REACTION**
Evaluation	Comparison of expected and received values according to the XML file
Test passed	Comparison OK
Test failed (examples)	Comparison not OK
Report	Printout of the automated SCL protocol tester <pass/fail>

Content of file "IO-Link-Safety_spec_device_final_testsuite_testcase_28.xml":

```xml
<?xml version="1.0" encoding="UTF-8"?>
<Testroot xsi:noNamespaceSchemaLocation="IO-Link-Safety-Test-Procedure_Types_V1.0.xsd"
xmlns:xsi="http://www.w3.org/2001/XMLSchema-instance" version="1.2" name="tc_28" date="20.11.2018: 14:01:13.945">
  <FSDeviceSclTestCaseSteps>
    <Transition SourceState="Init" TargetState="SystemStart_20"/>
    <Transition SourceState="SystemStart_20" TargetState="WaitOnSPDU_21"/>
    <FSDeviceReceive PDout="PD" PortNum="valid" MCount="2" setSD="0" ChFAckReq="0" CRC="valid"/>
    <Transition SourceState="WaitOnSPDU_21" TargetState="CheckSPDU_22"/>
    <Transition SourceState="CheckSPDU_22" TargetState="PrepareResponse_25"/>
    <Transition SourceState="PrepareResponse_25" TargetState="WaitOnSPDU_26"/>
    <FSDeviceSend PDin="PD" PortNum="valid" DCount="5" SDset="1" DCommErr="1" DTimeout="1" CRC="valid"/>
    <FSDeviceReceive PDout="PD" PortNum="valid" MCount="3" setSD="0" ChFAckReq="0" CRC="valid"/>
    <Transition SourceState="WaitOnSPDU_26" TargetState="CheckSPDU_27"/>
    <Transition SourceState="CheckSPDU_27" TargetState="PrepareResponse_25"/>
    <Transition SourceState="PrepareResponse_25" TargetState="WaitOnSPDU_26"/>
    <FSDeviceSend PDin="PD" PortNum="valid" DCount="4" SDset="1" DCommErr="1" DTimeout="0" CRC="valid"/>
    <FSDeviceReceive PDout="PD" PortNum="valid" MCount="3" setSD="0" ChFAckReq="0" CRC="valid"/>
    <Transition SourceState="WaitOnSPDU_26" TargetState="WaitOnSPDU_26"/>
  </FSDeviceSclTestCaseSteps>
</Testroot>
```

9.2.29 Test script 29

Table 83 defines the test conditions for this test case. The associated XML file contains steps and message parameters for the state flow check in case of no error, MCount = 2, and Timeout.

Table 83 – FS-Device test script 29

TEST CASE ATTRIBUTES	IDENTIFICATION / REFERENCE
Identification (ID)	SDCI_FSTC_0080
Name	FSTCD_SCLD_FLOW_SETSD0MC2TO
Purpose (short)	
Equipment under test (EUT)	FS-Device
Test case version	1.0
Category / type	FS-Device automated SCL protocol test
Specification (clause)	[3] clause 11.3.3, Figure 37 (services); clause 11.5.3, Figure 42 (state chart)
Configuration / setup	See Table 54
TEST CASE	**CONDITIONS / PERFORMANCE**
Purpose (detailed)	Protocol flow in case of distinct error
Precondition	FS-Device waiting for the first message
Procedure	See XML file "IO-Link-Safety_spec_device_final_testsuite_testcase_29.xml"
Test parameter	See Table 54 and XML file
Post condition	–
TEST CASE RESULTS	**CHECK / REACTION**
Evaluation	Comparison of expected and received values according to the XML file
Test passed	Comparison OK
Test failed (examples)	Comparison not OK
Report	Printout of the automated SCL protocol tester <pass/fail>

Content of file "IO-Link-Safety_spec_device_final_testsuite_testcase_29.xml":

```xml
<?xml version="1.0" encoding="UTF-8"?>
<Testroot xsi:noNamespaceSchemaLocation="IO-Link-Safety-Test-Procedure_Types_V1.0.xsd"
xmlns:xsi="http://www.w3.org/2001/XMLSchema-instance" version="1.2" name="tc_29" date="20.11.2018: 14:01:13.945">
  <FSDeviceSclTestCaseSteps>
    <Transition SourceState="Init" TargetState="SystemStart_20"/>
    <Transition SourceState="SystemStart_20" TargetState="WaitOnSPDU_21"/>
    <FSDeviceReceive PDout="PD" PortNum="valid" MCount="2" setSD="0" ChFAckReq="0" CRC="valid"/>
    <Transition SourceState="WaitOnSPDU_21" TargetState="CheckSPDU_22"/>
    <Transition SourceState="CheckSPDU_22" TargetState="PrepareResponse_25"/>
    <Transition SourceState="PrepareResponse_25" TargetState="WaitOnSPDU_26"/>
    <FSDeviceSend PDin="PD" PortNum="valid" DCount="5" SDset="1" DCommErr="1" DTimeout="1" CRC="valid"/>
    <FSDeviceReceive PDout="PD" PortNum="valid" MCount="3" setSD="0" ChFAckReq="0" CRC="valid"/>
    <Transition SourceState="WaitOnSPDU_26" TargetState="CheckSPDU_27"/>
    <Transition SourceState="CheckSPDU_27" TargetState="PrepareResponse_25"/>
    <Transition SourceState="PrepareResponse_25" TargetState="WaitOnSPDU_26"/>
    <FSDeviceSend PDin="PD" PortNum="valid" DCount="4" SDset="1" DCommErr="1" DTimeout="0" CRC="valid"/>
    <FSDeviceReceive PDout="PD" PortNum="invalid" MCount="1" setSD="0" ChFAckReq="0" CRC="valid"/>
    <Transition SourceState="WaitOnSPDU_26" TargetState="CheckSPDU_27"/>
    <Transition SourceState="CheckSPDU_27" TargetState="PrepareResponse_25"/>
    <Transition SourceState="PrepareResponse_25" TargetState="WaitOnSPDU_26"/>
    <FSDeviceSend PDin="PD" PortNum="valid" DCount="6" SDset="1" DCommErr="1" DTimeout="0" CRC="valid"/>
  </FSDeviceSclTestCaseSteps>
</Testroot>
```

9.2.30 Test script 30

Table 83 defines the test conditions for this test case. The associated XML file contains steps and message parameters for the state flow check in case of no error, MCount = 2, and Timeout.

Table 84 – FS-Device test script 30

TEST CASE ATTRIBUTES	IDENTIFICATION / REFERENCE
Identification (ID)	SDCI_FSTC_0081
Name	FSTCD_SCLD_FLOW_SETSD0MC2TO
Purpose (short)	
Equipment under test (EUT)	FS-Device
Test case version	1.0
Category / type	FS-Device automated SCL protocol test
Specification (clause)	[3] clause 11.3.3, Figure 37 (services); clause 11.5.3, Figure 42 (state chart)
Configuration / setup	See Table 54
TEST CASE	**CONDITIONS / PERFORMANCE**
Purpose (detailed)	Protocol flow in case of distinct error
Precondition	FS-Device waiting for the first message
Procedure	See XML file "IO-Link-Safety_spec_device_final_testsuite_testcase_30.xml"
Test parameter	See Table 54 and XML file
Post condition	–
TEST CASE RESULTS	**CHECK / REACTION**
Evaluation	Comparison of expected and received values according to the XML file
Test passed	Comparison OK
Test failed (examples)	Comparison not OK
Report	Printout of the automated SCL protocol tester <pass/fail>

Content of file "IO-Link-Safety_spec_device_final_testsuite_testcase_30.xml":

```xml
<?xml version="1.0" encoding="UTF-8"?>
<Testroot xsi:noNamespaceSchemaLocation="IO-Link-Safety-Test-Procedure_Types_V1.0.xsd"
xmlns:xsi="http://www.w3.org/2001/XMLSchema-instance" version="1.2" name="tc_30" date="20.11.2018: 14:01:13.945">
  <FSDeviceSclTestCaseSteps>
    <Transition SourceState="Init" TargetState="SystemStart_20"/>
    <Transition SourceState="SystemStart_20" TargetState="WaitOnSPDU_21"/>
    <FSDeviceReceive PDout="PD" PortNum="valid" MCount="2" setSD="0" ChFAckReq="0" CRC="valid"/>
    <Transition SourceState="WaitOnSPDU_21" TargetState="CheckSPDU_22"/>
    <Transition SourceState="CheckSPDU_22" TargetState="PrepareResponse_25"/>
    <Transition SourceState="PrepareResponse_25" TargetState="WaitOnSPDU_26"/>
    <FSDeviceSend PDin="PD" PortNum="valid" DCount="5" SDset="1" DCommErr="1" DTimeout="1" CRC="valid"/>
    <FSDeviceReceive PDout="PD" PortNum="valid" MCount="3" setSD="0" ChFAckReq="0" CRC="valid"/>
    <Transition SourceState="WaitOnSPDU_26" TargetState="CheckSPDU_27"/>
    <Transition SourceState="CheckSPDU_27" TargetState="PrepareResponse_25"/>
    <Transition SourceState="PrepareResponse_25" TargetState="WaitOnSPDU_26"/>
    <FSDeviceSend PDin="PD" PortNum="valid" DCount="4" SDset="1" DCommErr="1" DTimeout="0" CRC="valid"/>
    <FSDeviceReceive PDout="PD" PortNum="invalid" MCount="4" setSD="0" ChFAckReq="0" CRC="valid"/>
    <Transition SourceState="WaitOnSPDU_26" TargetState="CheckSPDU_27"/>
    <Transition SourceState="CheckSPDU_27" TargetState="PrepareResponse_25"/>
    <Transition SourceState="PrepareResponse_25" TargetState="WaitOnSPDU_26"/>
    <FSDeviceSend PDin="PD" PortNum="valid" DCount="3" SDset="1" DCommErr="1" DTimeout="0" CRC="valid"/>
  </FSDeviceSclTestCaseSteps>
</Testroot>
```

9.2.31 Test script 31

Table 85 defines the test conditions for this test case. The associated XML file contains steps and message parameters for the state flow check in case of no error, MCount = 3, and Timeout.

Table 85 – FS-Device test script 31

TEST CASE ATTRIBUTES	IDENTIFICATION / REFERENCE
Identification (ID)	SDCI_FSTC_0082
Name	FSTCD_SCLD_FLOW_SETSD0MC3TO
Purpose (short)	
Equipment under test (EUT)	FS-Device
Test case version	1.0
Category / type	FS-Device automated SCL protocol test
Specification (clause)	[3] clause 11.3.3, Figure 37 (services); clause 11.5.3, Figure 42 (state chart)
Configuration / setup	See Table 54
TEST CASE	**CONDITIONS / PERFORMANCE**
Purpose (detailed)	Protocol flow in case of distinct error
Precondition	FS-Device waiting for the first message
Procedure	See XML file "IO-Link-Safety_spec_device_final_testsuite_testcase_31.xml"
Test parameter	See Table 54 and XML file
Post condition	–
TEST CASE RESULTS	**CHECK / REACTION**
Evaluation	Comparison of expected and received values according to the XML file
Test passed	Comparison OK
Test failed (examples)	Comparison not OK
Report	Printout of the automated SCL protocol tester <pass/fail>

Content of file "IO-Link-Safety_spec_device_final_testsuite_testcase_31.xml":

```xml
<?xml version="1.0" encoding="UTF-8"?>
<Testroot xsi:noNamespaceSchemaLocation="IO-Link-Safety-Test-Procedure_Types_V1.0.xsd"
xmlns:xsi="http://www.w3.org/2001/XMLSchema-instance" version="1.2" name="tc_31" date="20.11.2018: 14:01:13.945">
  <FSDeviceSclTestCaseSteps>
    <Transition SourceState="Init" TargetState="SystemStart_20"/>
    <Transition SourceState="SystemStart_20" TargetState="WaitOnSPDU_21"/>
    <FSDeviceReceive PDout="PD" PortNum="valid" MCount="3" setSD="0" ChFAckReq="0" CRC="valid"/>
    <Transition SourceState="WaitOnSPDU_21" TargetState="CheckSPDU_22"/>
    <Transition SourceState="CheckSPDU_22" TargetState="PrepareResponse_25"/>
    <Transition SourceState="PrepareResponse_25" TargetState="WaitOnSPDU_26"/>
    <FSDeviceSend PDin="PD" PortNum="valid" DCount="4" SDset="1" DCommErr="1" DTimeout="1" CRC="valid"/>
    <FSDeviceReceive PDout="PD" PortNum="valid" MCount="4" setSD="0" ChFAckReq="0" CRC="valid"/>
    <Transition SourceState="WaitOnSPDU_26" TargetState="CheckSPDU_27"/>
    <Transition SourceState="CheckSPDU_27" TargetState="PrepareResponse_25"/>
    <Transition SourceState="PrepareResponse_25" TargetState="WaitOnSPDU_26"/>
    <FSDeviceSend PDin="PD" PortNum="valid" DCount="3" SDset="1" DCommErr="1" DTimeout="0" CRC="valid"/>
    <FSDeviceReceive PDout="PD" PortNum="valid" MCount="4" setSD="0" ChFAckReq="0" CRC="valid"/>
    <Transition SourceState="WaitOnSPDU_26" TargetState="WaitOnSPDU_26"/>
  </FSDeviceSclTestCaseSteps>
</Testroot>
```

9.2.32 Test script 32

Table 86 defines the test conditions for this test case. The associated XML file contains steps and message parameters for the state flow check in case of no error, MCount = 3, and Timeout.

Table 86 – FS-Device test script 32

TEST CASE ATTRIBUTES	IDENTIFICATION / REFERENCE
Identification (ID)	SDCI_FSTC_0083
Name	FSTCD_SCLD_FLOW_SETSD0MC3TO
Purpose (short)	
Equipment under test (EUT)	FS-Device
Test case version	1.0
Category / type	FS-Device automated SCL protocol test
Specification (clause)	[3] clause 11.3.3, Figure 37 (services); clause 11.5.3, Figure 42 (state chart)
Configuration / setup	See Table 54
TEST CASE	**CONDITIONS / PERFORMANCE**
Purpose (detailed)	Protocol flow in case of distinct error
Precondition	FS-Device waiting for the first message
Procedure	See XML file "IO-Link-Safety_spec_device_final_testsuite_testcase_32.xml"
Test parameter	See Table 54 and XML file
Post condition	–
TEST CASE RESULTS	**CHECK / REACTION**
Evaluation	Comparison of expected and received values according to the XML file
Test passed	Comparison OK
Test failed (examples)	Comparison not OK
Report	Printout of the automated SCL protocol tester <pass/fail>

Content of file "IO-Link-Safety_spec_device_final_testsuite_testcase_32.xml":

```xml
<?xml version="1.0" encoding="UTF-8"?>
<Testroot xsi:noNamespaceSchemaLocation="IO-Link-Safety-Test-Procedure_Types_V1.0.xsd"
xmlns:xsi="http://www.w3.org/2001/XMLSchema-instance" version="1.2" name="tc_32" date="20.11.2018: 14:01:13.945">
  <FSDeviceSclTestCaseSteps>
    <Transition SourceState="Init" TargetState="SystemStart_20"/>
    <Transition SourceState="SystemStart_20" TargetState="WaitOnSPDU_21"/>
    <FSDeviceReceive PDout="PD" PortNum="valid" MCount="3" setSD="0" ChFAckReq="0" CRC="valid"/>
    <Transition SourceState="WaitOnSPDU_21" TargetState="CheckSPDU_22"/>
    <Transition SourceState="CheckSPDU_22" TargetState="PrepareResponse_25"/>
    <Transition SourceState="PrepareResponse_25" TargetState="WaitOnSPDU_26"/>
    <FSDeviceSend PDin="PD" PortNum="valid" DCount="4" SDset="1" DCommErr="1" DTimeout="1" CRC="valid"/>
    <FSDeviceReceive PDout="PD" PortNum="valid" MCount="4" setSD="0" ChFAckReq="0" CRC="valid"/>
    <Transition SourceState="WaitOnSPDU_26" TargetState="CheckSPDU_27"/>
    <Transition SourceState="CheckSPDU_27" TargetState="PrepareResponse_25"/>
    <Transition SourceState="PrepareResponse_25" TargetState="WaitOnSPDU_26"/>
    <FSDeviceSend PDin="PD" PortNum="valid" DCount="3" SDset="1" DCommErr="1" DTimeout="0" CRC="valid"/>
    <FSDeviceReceive PDout="PD" PortNum="invalid" MCount="1" setSD="0" ChFAckReq="0" CRC="valid"/>
    <Transition SourceState="WaitOnSPDU_26" TargetState="CheckSPDU_27"/>
    <Transition SourceState="CheckSPDU_27" TargetState="PrepareResponse_25"/>
    <Transition SourceState="PrepareResponse_25" TargetState="WaitOnSPDU_26"/>
    <FSDeviceSend PDin="PD" PortNum="valid" DCount="6" SDset="1" DCommErr="1" DTimeout="0" CRC="valid"/>
  </FSDeviceSclTestCaseSteps>
</Testroot>
```

9.2.33 Test script 33

Table 87 defines the test conditions for this test case. The associated XML file contains steps and message parameters for the state flow check in case of no error, MCount = 3, and Timeout.

Table 87 – FS-Device test script 33

TEST CASE ATTRIBUTES	IDENTIFICATION / REFERENCE
Identification (ID)	SDCI_FSTC_0084
Name	FSTCD_SCLD_FLOW_SETSD0MC3TO
Purpose (short)	
Equipment under test (EUT)	FS-Device
Test case version	1.0
Category / type	FS-Device automated SCL protocol test
Specification (clause)	[3] clause 11.3.3, Figure 37 (services); clause 11.5.3, Figure 42 (state chart)
Configuration / setup	See Table 54
TEST CASE	**CONDITIONS / PERFORMANCE**
Purpose (detailed)	Protocol flow in case of distinct error
Precondition	FS-Device waiting for the first message
Procedure	See XML file "IO-Link-Safety_spec_device_final_testsuite_testcase_33.xml"
Test parameter	See Table 54 and XML file
Post condition	–
TEST CASE RESULTS	**CHECK / REACTION**
Evaluation	Comparison of expected and received values according to the XML file
Test passed	Comparison OK
Test failed (examples)	Comparison not OK
Report	Printout of the automated SCL protocol tester <pass/fail>

Content of file "IO-Link-Safety_spec_device_final_testsuite_testcase_33.xml":

```xml
<?xml version="1.0" encoding="UTF-8"?>
<Testroot xsi:noNamespaceSchemaLocation="IO-Link-Safety-Test-Procedure_Types_V1.0.xsd"
xmlns:xsi="http://www.w3.org/2001/XMLSchema-instance" version="1.2" name="tc_33" date="20.11.2018: 14:01:13.945">
  <FSDeviceSclTestCaseSteps>
    <Transition SourceState="Init" TargetState="SystemStart_20"/>
    <Transition SourceState="SystemStart_20" TargetState="WaitOnSPDU_21"/>
    <FSDeviceReceive PDout="PD" PortNum="valid" MCount="3" setSD="0" ChFAckReq="0" CRC="valid"/>
    <Transition SourceState="WaitOnSPDU_21" TargetState="CheckSPDU_22"/>
    <Transition SourceState="CheckSPDU_22" TargetState="PrepareResponse_25"/>
    <Transition SourceState="PrepareResponse_25" TargetState="WaitOnSPDU_26"/>
    <FSDeviceSend PDin="PD" PortNum="valid" DCount="4" SDset="1" DCommErr="1" DTimeout="1" CRC="valid"/>
    <FSDeviceReceive PDout="PD" PortNum="valid" MCount="4" setSD="0" ChFAckReq="0" CRC="valid"/>
    <Transition SourceState="WaitOnSPDU_26" TargetState="CheckSPDU_27"/>
    <Transition SourceState="CheckSPDU_27" TargetState="PrepareResponse_25"/>
    <Transition SourceState="PrepareResponse_25" TargetState="WaitOnSPDU_26"/>
    <FSDeviceSend PDin="PD" PortNum="valid" DCount="3" SDset="1" DCommErr="1" DTimeout="0" CRC="valid"/>
    <FSDeviceReceive PDout="PD" PortNum="invalid" MCount="5" setSD="0" ChFAckReq="0" CRC="valid"/>
    <Transition SourceState="WaitOnSPDU_26" TargetState="CheckSPDU_27"/>
    <Transition SourceState="CheckSPDU_27" TargetState="PrepareResponse_25"/>
    <Transition SourceState="PrepareResponse_25" TargetState="WaitOnSPDU_26"/>
    <FSDeviceSend PDin="PD" PortNum="valid" DCount="2" SDset="1" DCommErr="1" DTimeout="0" CRC="valid"/>
  </FSDeviceSclTestCaseSteps>
</Testroot>
```

9.2.34 Test script 34

Table 88 defines the test conditions for this test case. The associated XML file contains steps and message parameters for the state flow check in case of no error, MCount = 4, and Timeout.

Table 88 – FS-Device test script 34

TEST CASE ATTRIBUTES	IDENTIFICATION / REFERENCE
Identification (ID)	SDCI_FSTC_0085
Name	FSTCD_SCLD_FLOW_SETSD0MC4TO
Purpose (short)	
Equipment under test (EUT)	FS-Device
Test case version	1.0
Category / type	FS-Device automated SCL protocol test
Specification (clause)	[3] clause 11.3.3, Figure 37 (services); clause 11.5.3, Figure 42 (state chart)
Configuration / setup	See Table 54
TEST CASE	**CONDITIONS / PERFORMANCE**
Purpose (detailed)	Protocol flow in case of distinct error
Precondition	FS-Device waiting for the first message
Procedure	See XML file "IO-Link-Safety_spec_device_final_testsuite_testcase_34.xml"
Test parameter	See Table 54 and XML file
Post condition	–
TEST CASE RESULTS	**CHECK / REACTION**
Evaluation	Comparison of expected and received values according to the XML file
Test passed	Comparison OK
Test failed (examples)	Comparison not OK
Report	Printout of the automated SCL protocol tester <pass/fail>

Content of file "IO-Link-Safety_spec_device_final_testsuite_testcase_34.xml":

```xml
<?xml version="1.0" encoding="UTF-8"?>
<Testroot xsi:noNamespaceSchemaLocation="IO-Link-Safety-Test-Procedure_Types_V1.0.xsd"
xmlns:xsi="http://www.w3.org/2001/XMLSchema-instance" version="1.2" name="tc_34" date="20.11.2018: 14:01:13.945">
  <FSDeviceSclTestCaseSteps>
    <Transition SourceState="Init" TargetState="SystemStart_20"/>
    <Transition SourceState="SystemStart_20" TargetState="WaitOnSPDU_21"/>
    <FSDeviceReceive PDout="PD" PortNum="valid" MCount="4" setSD="0" ChFAckReq="0" CRC="valid"/>
    <Transition SourceState="WaitOnSPDU_21" TargetState="CheckSPDU_22"/>
    <Transition SourceState="CheckSPDU_22" TargetState="PrepareResponse_25"/>
    <Transition SourceState="PrepareResponse_25" TargetState="WaitOnSPDU_26"/>
    <FSDeviceSend PDin="PD" PortNum="valid" DCount="3" SDset="1" DCommErr="1" DTimeout="1" CRC="valid"/>
    <FSDeviceReceive PDout="PD" PortNum="valid" MCount="5" setSD="0" ChFAckReq="0" CRC="valid"/>
    <Transition SourceState="WaitOnSPDU_26" TargetState="CheckSPDU_27"/>
    <Transition SourceState="CheckSPDU_27" TargetState="PrepareResponse_25"/>
    <Transition SourceState="PrepareResponse_25" TargetState="WaitOnSPDU_26"/>
    <FSDeviceSend PDin="PD" PortNum="valid" DCount="2" SDset="1" DCommErr="1" DTimeout="0" CRC="valid"/>
    <FSDeviceReceive PDout="PD" PortNum="valid" MCount="5" setSD="0" ChFAckReq="0" CRC="valid"/>
    <Transition SourceState="WaitOnSPDU_26" TargetState="WaitOnSPDU_26"/>
  </FSDeviceSclTestCaseSteps>
</Testroot>
```

9.2.35 Test script 35

Table 89 defines the test conditions for this test case. The associated XML file contains steps and message parameters for the state flow check in case of no error, MCount = 4, and Timeout.

Table 89 – FS-Device test script 35

TEST CASE ATTRIBUTES	IDENTIFICATION / REFERENCE
Identification (ID)	SDCI_FSTC_0086
Name	FSTCD_SCLD_FLOW_SETSD0MC4TO
Purpose (short)	
Equipment under test (EUT)	FS-Device
Test case version	1.0
Category / type	FS-Device automated SCL protocol test
Specification (clause)	[3] clause 11.3.3, Figure 37 (services); clause 11.5.3, Figure 42 (state chart)
Configuration / setup	See Table 54
TEST CASE	**CONDITIONS / PERFORMANCE**
Purpose (detailed)	Protocol flow in case of distinct error
Precondition	FS-Device waiting for the first message
Procedure	See XML file "IO-Link-Safety_spec_device_final_testsuite_testcase_35.xml"
Test parameter	See Table 54 and XML file
Post condition	–
TEST CASE RESULTS	**CHECK / REACTION**
Evaluation	Comparison of expected and received values according to the XML file
Test passed	Comparison OK
Test failed (examples)	Comparison not OK
Report	Printout of the automated SCL protocol tester <pass/fail>

Content of file "IO-Link-Safety_spec_device_final_testsuite_testcase_35.xml":

```xml
<?xml version="1.0" encoding="UTF-8"?>
<Testroot xsi:noNamespaceSchemaLocation="IO-Link-Safety-Test-Procedure_Types_V1.0.xsd"
xmlns:xsi="http://www.w3.org/2001/XMLSchema-instance" version="1.2" name="tc_35" date="20.11.2018: 14:01:13.946">
  <FSDeviceSclTestCaseSteps>
    <Transition SourceState="Init" TargetState="SystemStart_20"/>
    <Transition SourceState="SystemStart_20" TargetState="WaitOnSPDU_21"/>
    <FSDeviceReceive PDout="PD" PortNum="valid" MCount="4" setSD="0" ChFAckReq="0" CRC="valid"/>
    <Transition SourceState="WaitOnSPDU_21" TargetState="CheckSPDU_22"/>
    <Transition SourceState="CheckSPDU_22" TargetState="PrepareResponse_25"/>
    <Transition SourceState="PrepareResponse_25" TargetState="WaitOnSPDU_26"/>
    <FSDeviceSend PDin="PD" PortNum="valid" DCount="3" SDset="1" DCommErr="1" DTimeout="1" CRC="valid"/>
    <FSDeviceReceive PDout="PD" PortNum="valid" MCount="5" setSD="0" ChFAckReq="0" CRC="valid"/>
    <Transition SourceState="WaitOnSPDU_26" TargetState="CheckSPDU_27"/>
    <Transition SourceState="CheckSPDU_27" TargetState="PrepareResponse_25"/>
    <Transition SourceState="PrepareResponse_25" TargetState="WaitOnSPDU_26"/>
    <FSDeviceSend PDin="PD" PortNum="valid" DCount="2" SDset="1" DCommErr="1" DTimeout="0" CRC="valid"/>
    <FSDeviceReceive PDout="PD" PortNum="invalid" MCount="1" setSD="0" ChFAckReq="0" CRC="valid"/>
    <Transition SourceState="WaitOnSPDU_26" TargetState="CheckSPDU_27"/>
    <Transition SourceState="CheckSPDU_27" TargetState="PrepareResponse_25"/>
    <Transition SourceState="PrepareResponse_25" TargetState="WaitOnSPDU_26"/>
    <FSDeviceSend PDin="PD" PortNum="valid" DCount="6" SDset="1" DCommErr="1" DTimeout="0" CRC="valid"/>
  </FSDeviceSclTestCaseSteps>
</Testroot>
```

9.2.36 Test script 36

Table 90 defines the test conditions for this test case. The associated XML file contains steps and message parameters for the state flow check in case of no error, MCount = 4, and Timeout.

Table 90 – FS-Device test script 36

TEST CASE ATTRIBUTES	IDENTIFICATION / REFERENCE
Identification (ID)	SDCI_FSTC_0087
Name	FSTCD_SCLD_FLOW_SETSD0MC4TO
Purpose (short)	
Equipment under test (EUT)	FS-Device
Test case version	1.0
Category / type	FS-Device automated SCL protocol test
Specification (clause)	[3] clause 11.3.3, Figure 37 (services); clause 11.5.3, Figure 42 (state chart)
Configuration / setup	See Table 54
TEST CASE	**CONDITIONS / PERFORMANCE**
Purpose (detailed)	Protocol flow in case of distinct error
Precondition	FS-Device waiting for the first message
Procedure	See XML file "IO-Link-Safety_spec_device_final_testsuite_testcase_36.xml"
Test parameter	See Table 54 and XML file
Post condition	–
TEST CASE RESULTS	**CHECK / REACTION**
Evaluation	Comparison of expected and received values according to the XML file
Test passed	Comparison OK
Test failed (examples)	Comparison not OK
Report	Printout of the automated SCL protocol tester <pass/fail>

Content of file "IO-Link-Safety_spec_device_final_testsuite_testcase_36.xml":

```xml
<?xml version="1.0" encoding="UTF-8"?>
<Testroot xsi:noNamespaceSchemaLocation="IO-Link-Safety-Test-Procedure_Types_V1.0.xsd"
xmlns:xsi="http://www.w3.org/2001/XMLSchema-instance" version="1.2" name="tc_36" date="20.11.2018: 14:01:13.946">
  <FSDeviceSclTestCaseSteps>
    <Transition SourceState="Init" TargetState="SystemStart_20"/>
    <Transition SourceState="SystemStart_20" TargetState="WaitOnSPDU_21"/>
    <FSDeviceReceive PDout="PD" PortNum="valid" MCount="4" setSD="0" ChFAckReq="0" CRC="valid"/>
    <Transition SourceState="WaitOnSPDU_21" TargetState="CheckSPDU_22"/>
    <Transition SourceState="CheckSPDU_22" TargetState="PrepareResponse_25"/>
    <Transition SourceState="PrepareResponse_25" TargetState="WaitOnSPDU_26"/>
    <FSDeviceSend PDin="PD" PortNum="valid" DCount="3" SDset="1" DCommErr="1" DTimeout="1" CRC="valid"/>
    <FSDeviceReceive PDout="PD" PortNum="valid" MCount="5" setSD="0" ChFAckReq="0" CRC="valid"/>
    <Transition SourceState="WaitOnSPDU_26" TargetState="CheckSPDU_27"/>
    <Transition SourceState="CheckSPDU_27" TargetState="PrepareResponse_25"/>
    <Transition SourceState="PrepareResponse_25" TargetState="WaitOnSPDU_26"/>
    <FSDeviceSend PDin="PD" PortNum="valid" DCount="2" SDset="1" DCommErr="1" DTimeout="0" CRC="valid"/>
    <FSDeviceReceive PDout="PD" PortNum="invalid" MCount="6" setSD="0" ChFAckReq="0" CRC="valid"/>
    <Transition SourceState="WaitOnSPDU_26" TargetState="CheckSPDU_27"/>
    <Transition SourceState="CheckSPDU_27" TargetState="PrepareResponse_25"/>
    <Transition SourceState="PrepareResponse_25" TargetState="WaitOnSPDU_26"/>
    <FSDeviceSend PDin="PD" PortNum="valid" DCount="1" SDset="1" DCommErr="1" DTimeout="0" CRC="valid"/>
  </FSDeviceSclTestCaseSteps>
</Testroot>
```

9.2.37 Test script 37

Table 91 defines the test conditions for this test case. The associated XML file contains steps and message parameters for the state flow check in case of no error, MCount = 5, and Timeout.

Table 91 – FS-Device test script 37

TEST CASE ATTRIBUTES	IDENTIFICATION / REFERENCE
Identification (ID)	SDCI_FSTC_0088
Name	FSTCD_SCLD_FLOW_SETSD0MC5TO
Purpose (short)	
Equipment under test (EUT)	FS-Device
Test case version	1.0
Category / type	FS-Device automated SCL protocol test
Specification (clause)	[3] clause 11.3.3, Figure 37 (services); clause 11.5.3, Figure 42 (state chart)
Configuration / setup	See Table 54
TEST CASE	**CONDITIONS / PERFORMANCE**
Purpose (detailed)	Protocol flow in case of distinct error
Precondition	FS-Device waiting for the first message
Procedure	See XML file "IO-Link-Safety_spec_device_final_testsuite_testcase_37.xml"
Test parameter	See Table 54 and XML file
Post condition	–
TEST CASE RESULTS	**CHECK / REACTION**
Evaluation	Comparison of expected and received values according to the XML file
Test passed	Comparison OK
Test failed (examples)	Comparison not OK
Report	Printout of the automated SCL protocol tester <pass/fail>

Content of file "IO-Link-Safety_spec_device_final_testsuite_testcase_37.xml":

```xml
<?xml version="1.0" encoding="UTF-8"?>
<Testroot xsi:noNamespaceSchemaLocation="IO-Link-Safety-Test-Procedure_Types_V1.0.xsd"
xmlns:xsi="http://www.w3.org/2001/XMLSchema-instance" version="1.2" name="tc_37" date="20.11.2018: 14:01:13.946">
  <FSDeviceSclTestCaseSteps>
    <Transition SourceState="Init" TargetState="SystemStart_20"/>
    <Transition SourceState="SystemStart_20" TargetState="WaitOnSPDU_21"/>
    <FSDeviceReceive PDout="PD" PortNum="valid" MCount="5" setSD="0" ChFAckReq="0" CRC="valid"/>
    <Transition SourceState="WaitOnSPDU_21" TargetState="CheckSPDU_22"/>
    <Transition SourceState="CheckSPDU_22" TargetState="PrepareResponse_25"/>
    <Transition SourceState="PrepareResponse_25" TargetState="WaitOnSPDU_26"/>
    <FSDeviceSend PDin="PD" PortNum="valid" DCount="2" SDset="1" DCommErr="1" DTimeout="1" CRC="valid"/>
    <FSDeviceReceive PDout="PD" PortNum="valid" MCount="6" setSD="0" ChFAckReq="0" CRC="valid"/>
    <Transition SourceState="WaitOnSPDU_26" TargetState="CheckSPDU_27"/>
    <Transition SourceState="CheckSPDU_27" TargetState="PrepareResponse_25"/>
    <Transition SourceState="PrepareResponse_25" TargetState="WaitOnSPDU_26"/>
    <FSDeviceSend PDin="PD" PortNum="valid" DCount="1" SDset="1" DCommErr="1" DTimeout="0" CRC="valid"/>
    <FSDeviceReceive PDout="PD" PortNum="valid" MCount="6" setSD="0" ChFAckReq="0" CRC="valid"/>
    <Transition SourceState="WaitOnSPDU_26" TargetState="WaitOnSPDU_26"/>
  </FSDeviceSclTestCaseSteps>
</Testroot>
```

9.2.38 Test script 38

Table 92 defines the test conditions for this test case. The associated XML file contains steps and message parameters for the state flow check in case of no error, MCount = 5, and Timeout.

Table 92 – FS-Device test script 38

TEST CASE ATTRIBUTES	IDENTIFICATION / REFERENCE
Identification (ID)	SDCI_FSTC_0089
Name	FSTCD_SCLD_FLOW_SETSD0MC5TO
Purpose (short)	
Equipment under test (EUT)	FS-Device
Test case version	1.0
Category / type	FS-Device automated SCL protocol test
Specification (clause)	[3] clause 11.3.3, Figure 37 (services); clause 11.5.3, Figure 42 (state chart)
Configuration / setup	See Table 54
TEST CASE	**CONDITIONS / PERFORMANCE**
Purpose (detailed)	Protocol flow in case of distinct error
Precondition	FS-Device waiting for the first message
Procedure	See XML file "IO-Link-Safety_spec_device_final_testsuite_testcase_38.xml"
Test parameter	See Table 54 and XML file
Post condition	–
TEST CASE RESULTS	**CHECK / REACTION**
Evaluation	Comparison of expected and received values according to the XML file
Test passed	Comparison OK
Test failed (examples)	Comparison not OK
Report	Printout of the automated SCL protocol tester <pass/fail>

Content of file "IO-Link-Safety_spec_device_final_testsuite_testcase_38.xml":

```xml
<?xml version="1.0" encoding="UTF-8"?>
<Testroot xsi:noNamespaceSchemaLocation="IO-Link-Safety-Test-Procedure_Types_V1.0.xsd"
xmlns:xsi="http://www.w3.org/2001/XMLSchema-instance" version="1.2" name="tc_38" date="20.11.2018: 14:01:13.946">
  <FSDeviceSclTestCaseSteps>
    <Transition SourceState="Init" TargetState="SystemStart_20"/>
    <Transition SourceState="SystemStart_20" TargetState="WaitOnSPDU_21"/>
    <FSDeviceReceive PDout="PD" PortNum="valid" MCount="5" setSD="0" ChFAckReq="0" CRC="valid"/>
    <Transition SourceState="WaitOnSPDU_21" TargetState="CheckSPDU_22"/>
    <Transition SourceState="CheckSPDU_22" TargetState="PrepareResponse_25"/>
    <Transition SourceState="PrepareResponse_25" TargetState="WaitOnSPDU_26"/>
    <FSDeviceSend PDin="PD" PortNum="valid" DCount="2" SDset="1" DCommErr="1" DTimeout="1" CRC="valid"/>
    <FSDeviceReceive PDout="PD" PortNum="valid" MCount="6" setSD="0" ChFAckReq="0" CRC="valid"/>
    <Transition SourceState="WaitOnSPDU_26" TargetState="CheckSPDU_27"/>
    <Transition SourceState="CheckSPDU_27" TargetState="PrepareResponse_25"/>
    <Transition SourceState="PrepareResponse_25" TargetState="WaitOnSPDU_26"/>
    <FSDeviceSend PDin="PD" PortNum="valid" DCount="1" SDset="1" DCommErr="1" DTimeout="0" CRC="valid"/>
    <FSDeviceReceive PDout="PD" PortNum="invalid" MCount="1" setSD="0" ChFAckReq="0" CRC="valid"/>
    <Transition SourceState="WaitOnSPDU_26" TargetState="CheckSPDU_27"/>
    <Transition SourceState="CheckSPDU_27" TargetState="PrepareResponse_25"/>
    <Transition SourceState="PrepareResponse_25" TargetState="WaitOnSPDU_26"/>
    <FSDeviceSend PDin="PD" PortNum="valid" DCount="6" SDset="1" DCommErr="1" DTimeout="0" CRC="valid"/>
  </FSDeviceSclTestCaseSteps>
</Testroot>
```

9.2.39 Test script 39

Table 93 defines the test conditions for this test case. The associated XML file contains steps and message parameters for the state flow check in case of no error, MCount = 5, and Timeout.

Table 93 – FS-Device test script 39

TEST CASE ATTRIBUTES	IDENTIFICATION / REFERENCE
Identification (ID)	SDCI_FSTC_0090
Name	FSTCD_SCLD_FLOW_SETSD0MC5TO
Purpose (short)	
Equipment under test (EUT)	FS-Device
Test case version	1.0
Category / type	FS-Device automated SCL protocol test
Specification (clause)	[3] clause 11.3.3, Figure 37 (services); clause 11.5.3, Figure 42 (state chart)
Configuration / setup	See Table 54
TEST CASE	**CONDITIONS / PERFORMANCE**
Purpose (detailed)	Protocol flow in case of distinct error
Precondition	FS-Device waiting for the first message
Procedure	See XML file "IO-Link-Safety_spec_device_final_testsuite_testcase_39.xml"
Test parameter	See Table 54 and XML file
Post condition	–
TEST CASE RESULTS	**CHECK / REACTION**
Evaluation	Comparison of expected and received values according to the XML file
Test passed	Comparison OK
Test failed (examples)	Comparison not OK
Report	Printout of the automated SCL protocol tester <pass/fail>

Content of file "IO-Link-Safety_spec_device_final_testsuite_testcase_39.xml":

```xml
<?xml version="1.0" encoding="UTF-8"?>
<Testroot xsi:noNamespaceSchemaLocation="IO-Link-Safety-Test-Procedure_Types_V1.0.xsd"
xmlns:xsi="http://www.w3.org/2001/XMLSchema-instance" version="1.2" name="tc_39" date="20.11.2018: 14:01:13.946">
  <FSDeviceSclTestCaseSteps>
    <Transition SourceState="Init" TargetState="SystemStart_20"/>
    <Transition SourceState="SystemStart_20" TargetState="WaitOnSPDU_21"/>
    <FSDeviceReceive PDout="PD" PortNum="valid" MCount="5" setSD="0" ChFAckReq="0" CRC="valid"/>
    <Transition SourceState="WaitOnSPDU_21" TargetState="CheckSPDU_22"/>
    <Transition SourceState="CheckSPDU_22" TargetState="PrepareResponse_25"/>
    <Transition SourceState="PrepareResponse_25" TargetState="WaitOnSPDU_26"/>
    <FSDeviceSend PDin="PD" PortNum="valid" DCount="2" SDset="1" DCommErr="1" DTimeout="1" CRC="valid"/>
    <FSDeviceReceive PDout="PD" PortNum="valid" MCount="6" setSD="0" ChFAckReq="0" CRC="valid"/>
    <Transition SourceState="WaitOnSPDU_26" TargetState="CheckSPDU_27"/>
    <Transition SourceState="CheckSPDU_27" TargetState="PrepareResponse_25"/>
    <Transition SourceState="PrepareResponse_25" TargetState="WaitOnSPDU_26"/>
    <FSDeviceSend PDin="PD" PortNum="valid" DCount="1" SDset="1" DCommErr="1" DTimeout="0" CRC="valid"/>
    <FSDeviceReceive PDout="PD" PortNum="invalid" MCount="7" setSD="0" ChFAckReq="0" CRC="valid"/>
    <Transition SourceState="WaitOnSPDU_26" TargetState="CheckSPDU_27"/>
    <Transition SourceState="CheckSPDU_27" TargetState="PrepareResponse_25"/>
    <Transition SourceState="PrepareResponse_25" TargetState="WaitOnSPDU_26"/>
    <FSDeviceSend PDin="PD" PortNum="valid" DCount="0" SDset="1" DCommErr="1" DTimeout="0" CRC="valid"/>
  </FSDeviceSclTestCaseSteps>
</Testroot>
```

9.2.40 Test script 40

Table 94 defines the test conditions for this test case. The associated XML file contains steps and message parameters for the state flow check in case of no error, MCount = 6, and Timeout.

Table 94 – FS-Device test script 40

TEST CASE ATTRIBUTES	IDENTIFICATION / REFERENCE
Identification (ID)	SDCI_FSTC_0091
Name	FSTCD_SCLD_FLOW_SETSD0MC6TO
Purpose (short)	
Equipment under test (EUT)	FS-Device
Test case version	1.0
Category / type	FS-Device automated SCL protocol test
Specification (clause)	[3] clause 11.3.3, Figure 37 (services); clause 11.5.3, Figure 42 (state chart)
Configuration / setup	See Table 54
TEST CASE	**CONDITIONS / PERFORMANCE**
Purpose (detailed)	Protocol flow in case of distinct error
Precondition	FS-Device waiting for the first message
Procedure	See XML file "IO-Link-Safety_spec_device_final_testsuite_testcase_40.xml"
Test parameter	See Table 54 and XML file
Post condition	–
TEST CASE RESULTS	**CHECK / REACTION**
Evaluation	Comparison of expected and received values according to the XML file
Test passed	Comparison OK
Test failed (examples)	Comparison not OK
Report	Printout of the automated SCL protocol tester <pass/fail>

Content of file "IO-Link-Safety_spec_device_final_testsuite_testcase_40.xml":

```xml
<?xml version="1.0" encoding="UTF-8"?>
<Testroot xsi:noNamespaceSchemaLocation="IO-Link-Safety-Test-Procedure_Types_V1.0.xsd"
xmlns:xsi="http://www.w3.org/2001/XMLSchema-instance" version="1.2" name="tc_40" date="20.11.2018: 14:01:13.946">
  <FSDeviceSclTestCaseSteps>
    <Transition SourceState="Init" TargetState="SystemStart_20"/>
    <Transition SourceState="SystemStart_20" TargetState="WaitOnSPDU_21"/>
    <FSDeviceReceive PDout="PD" PortNum="valid" MCount="6" setSD="0" ChFAckReq="0" CRC="valid"/>
    <Transition SourceState="WaitOnSPDU_21" TargetState="CheckSPDU_22"/>
    <Transition SourceState="CheckSPDU_22" TargetState="PrepareResponse_25"/>
    <Transition SourceState="PrepareResponse_25" TargetState="WaitOnSPDU_26"/>
    <FSDeviceSend PDin="PD" PortNum="valid" DCount="1" SDset="1" DCommErr="1" DTimeout="1" CRC="valid"/>
    <FSDeviceReceive PDout="PD" PortNum="valid" MCount="7" setSD="0" ChFAckReq="0" CRC="valid"/>
    <Transition SourceState="WaitOnSPDU_26" TargetState="CheckSPDU_27"/>
    <Transition SourceState="CheckSPDU_27" TargetState="PrepareResponse_25"/>
    <Transition SourceState="PrepareResponse_25" TargetState="WaitOnSPDU_26"/>
    <FSDeviceSend PDin="PD" PortNum="valid" DCount="0" SDset="1" DCommErr="1" DTimeout="0" CRC="valid"/>
    <FSDeviceReceive PDout="PD" PortNum="valid" MCount="7" setSD="0" ChFAckReq="0" CRC="valid"/>
    <Transition SourceState="WaitOnSPDU_26" TargetState="WaitOnSPDU_26"/>
  </FSDeviceSclTestCaseSteps>
</Testroot>
```

9.2.41 Test script 41

Table 95 defines the test conditions for this test case. The associated XML file contains steps and message parameters for the state flow check in case of no error, MCount = 6, and Timeout.

Table 95 – FS-Device test script 41

TEST CASE ATTRIBUTES	IDENTIFICATION / REFERENCE
Identification (ID)	SDCI_FSTC_0092
Name	FSTCD_SCLD_FLOW_SETSD0MC6TO
Purpose (short)	
Equipment under test (EUT)	FS-Device
Test case version	1.0
Category / type	FS-Device automated SCL protocol test
Specification (clause)	[3] clause 11.3.3, Figure 37 (services); clause 11.5.3, Figure 42 (state chart)
Configuration / setup	See Table 54
TEST CASE	**CONDITIONS / PERFORMANCE**
Purpose (detailed)	Protocol flow in case of distinct error
Precondition	FS-Device waiting for the first message
Procedure	See XML file "IO-Link-Safety_spec_device_final_testsuite_testcase_41.xml"
Test parameter	See Table 54 and XML file
Post condition	–
TEST CASE RESULTS	**CHECK / REACTION**
Evaluation	Comparison of expected and received values according to the XML file
Test passed	Comparison OK
Test failed (examples)	Comparison not OK
Report	Printout of the automated SCL protocol tester <pass/fail>

Content of file "IO-Link-Safety_spec_device_final_testsuite_testcase_41.xml":

```xml
<?xml version="1.0" encoding="UTF-8"?>
<Testroot xsi:noNamespaceSchemaLocation="IO-Link-Safety-Test-Procedure_Types_V1.0.xsd"
xmlns:xsi="http://www.w3.org/2001/XMLSchema-instance" version="1.2" name="tc_41" date="20.11.2018: 14:01:13.946">
  <FSDeviceSclTestCaseSteps>
    <Transition SourceState="Init" TargetState="SystemStart_20"/>
    <Transition SourceState="SystemStart_20" TargetState="WaitOnSPDU_21"/>
    <FSDeviceReceive PDout="PD" PortNum="valid" MCount="6" setSD="0" ChFAckReq="0" CRC="valid"/>
    <Transition SourceState="WaitOnSPDU_21" TargetState="CheckSPDU_22"/>
    <Transition SourceState="CheckSPDU_22" TargetState="PrepareResponse_25"/>
    <Transition SourceState="PrepareResponse_25" TargetState="WaitOnSPDU_26"/>
    <FSDeviceSend PDin="PD" PortNum="valid" DCount="1" SDset="1" DCommErr="1" DTimeout="1" CRC="valid"/>
    <FSDeviceReceive PDout="PD" PortNum="valid" MCount="7" setSD="0" ChFAckReq="0" CRC="valid"/>
    <Transition SourceState="WaitOnSPDU_26" TargetState="CheckSPDU_27"/>
    <Transition SourceState="CheckSPDU_27" TargetState="PrepareResponse_25"/>
    <Transition SourceState="PrepareResponse_25" TargetState="WaitOnSPDU_26"/>
    <FSDeviceSend PDin="PD" PortNum="valid" DCount="0" SDset="1" DCommErr="1" DTimeout="0" CRC="valid"/>
    <FSDeviceReceive PDout="PD" PortNum="invalid" MCount="1" setSD="0" ChFAckReq="0" CRC="valid"/>
    <Transition SourceState="WaitOnSPDU_26" TargetState="CheckSPDU_27"/>
    <Transition SourceState="CheckSPDU_27" TargetState="PrepareResponse_25"/>
    <Transition SourceState="PrepareResponse_25" TargetState="WaitOnSPDU_26"/>
    <FSDeviceSend PDin="PD" PortNum="valid" DCount="6" SDset="1" DCommErr="1" DTimeout="0" CRC="valid"/>
  </FSDeviceSclTestCaseSteps>
</Testroot>
```

9.2.42 Test script 42

Table 96 defines the test conditions for this test case. The associated XML file contains steps and message parameters for the state flow check in case of no error, MCount = 7, and Timeout.

Table 96 – FS-Device test script 42

TEST CASE ATTRIBUTES	IDENTIFICATION / REFERENCE
Identification (ID)	SDCI_FSTC_0093
Name	FSTCD_SCLD_FLOW_SETSD0MC7TO
Purpose (short)	
Equipment under test (EUT)	FS-Device
Test case version	1.0
Category / type	FS-Device automated SCL protocol test
Specification (clause)	[3] clause 11.3.3, Figure 37 (services); clause 11.5.3, Figure 42 (state chart)
Configuration / setup	See Table 54
TEST CASE	**CONDITIONS / PERFORMANCE**
Purpose (detailed)	Protocol flow in case of distinct error
Precondition	FS-Device waiting for the first message
Procedure	See XML file "IO-Link-Safety_spec_device_final_testsuite_testcase_42.xml"
Test parameter	See Table 54 and XML file
Post condition	–
TEST CASE RESULTS	**CHECK / REACTION**
Evaluation	Comparison of expected and received values according to the XML file
Test passed	Comparison OK
Test failed (examples)	Comparison not OK
Report	Printout of the automated SCL protocol tester <pass/fail>

Content of file "IO-Link-Safety_spec_device_final_testsuite_testcase_42.xml":

```xml
<?xml version="1.0" encoding="UTF-8"?>
<Testroot xsi:noNamespaceSchemaLocation="IO-Link-Safety-Test-Procedure_Types_V1.0.xsd"
xmlns:xsi="http://www.w3.org/2001/XMLSchema-instance" version="1.2" name="tc_42" date="20.11.2018: 14:01:13.946">
  <FSDeviceSclTestCaseSteps>
    <Transition SourceState="Init" TargetState="SystemStart_20"/>
    <Transition SourceState="SystemStart_20" TargetState="WaitOnSPDU_21"/>
    <FSDeviceReceive PDout="PD" PortNum="valid" MCount="7" setSD="0" ChFAckReq="0" CRC="valid"/>
    <Transition SourceState="WaitOnSPDU_21" TargetState="CheckSPDU_22"/>
    <Transition SourceState="CheckSPDU_22" TargetState="PrepareResponse_25"/>
    <Transition SourceState="PrepareResponse_25" TargetState="WaitOnSPDU_26"/>
    <FSDeviceSend PDin="PD" PortNum="valid" DCount="0" SDset="1" DCommErr="1" DTimeout="1" CRC="valid"/>
    <FSDeviceReceive PDout="PD" PortNum="valid" MCount="1" setSD="0" ChFAckReq="0" CRC="valid"/>
    <Transition SourceState="WaitOnSPDU_26" TargetState="CheckSPDU_27"/>
    <Transition SourceState="CheckSPDU_27" TargetState="PrepareResponse_25"/>
    <Transition SourceState="PrepareResponse_25" TargetState="WaitOnSPDU_26"/>
    <FSDeviceSend PDin="PD" PortNum="valid" DCount="6" SDset="1" DCommErr="1" DTimeout="0" CRC="valid"/>
    <FSDeviceReceive PDout="PD" PortNum="valid" MCount="1" setSD="0" ChFAckReq="0" CRC="valid"/>
    <Transition SourceState="WaitOnSPDU_26" TargetState="WaitOnSPDU_26"/>
  </FSDeviceSclTestCaseSteps>
</Testroot>
```

9.2.43 Test script 43

Table 97 defines the test conditions for this test case. The associated XML file contains steps and message parameters for the state flow check in case of no error, MCount = 7, and Timeout.

Table 97 – FS-Device test script 43

TEST CASE ATTRIBUTES	IDENTIFICATION / REFERENCE
Identification (ID)	SDCI_FSTC_0094
Name	FSTCD_SCLD_FLOW_SETSD0MC7TO
Purpose (short)	
Equipment under test (EUT)	FS-Device
Test case version	1.0
Category / type	FS-Device automated SCL protocol test
Specification (clause)	[3] clause 11.3.3, Figure 37 (services); clause 11.5.3, Figure 42 (state chart)
Configuration / setup	See Table 54
TEST CASE	**CONDITIONS / PERFORMANCE**
Purpose (detailed)	Protocol flow in case of distinct error
Precondition	FS-Device waiting for the first message
Procedure	See XML file "IO-Link-Safety_spec_device_final_testsuite_testcase_43.xml"
Test parameter	See Table 54 and XML file
Post condition	–
TEST CASE RESULTS	**CHECK / REACTION**
Evaluation	Comparison of expected and received values according to the XML file
Test passed	Comparison OK
Test failed (examples)	Comparison not OK
Report	Printout of the automated SCL protocol tester <pass/fail>

Content of file "IO-Link-Safety_spec_device_final_testsuite_testcase_43.xml":

```xml
<?xml version="1.0" encoding="UTF-8"?>
<Testroot xsi:noNamespaceSchemaLocation="IO-Link-Safety-Test-Procedure_Types_V1.0.xsd"
xmlns:xsi="http://www.w3.org/2001/XMLSchema-instance" version="1.2" name="tc_43" date="20.11.2018: 14:01:13.946">
  <FSDeviceSclTestCaseSteps>
    <Transition SourceState="Init" TargetState="SystemStart_20"/>
    <Transition SourceState="SystemStart_20" TargetState="WaitOnSPDU_21"/>
    <FSDeviceReceive PDout="PD" PortNum="valid" MCount="7" setSD="0" ChFAckReq="0" CRC="valid"/>
    <Transition SourceState="WaitOnSPDU_21" TargetState="CheckSPDU_22"/>
    <Transition SourceState="CheckSPDU_22" TargetState="PrepareResponse_25"/>
    <Transition SourceState="PrepareResponse_25" TargetState="WaitOnSPDU_26"/>
    <FSDeviceSend PDin="PD" PortNum="valid" DCount="0" SDset="1" DCommErr="1" DTimeout="1" CRC="valid"/>
    <FSDeviceReceive PDout="PD" PortNum="valid" MCount="1" setSD="0" ChFAckReq="0" CRC="valid"/>
    <Transition SourceState="WaitOnSPDU_26" TargetState="CheckSPDU_27"/>
    <Transition SourceState="CheckSPDU_27" TargetState="PrepareResponse_25"/>
    <Transition SourceState="PrepareResponse_25" TargetState="WaitOnSPDU_26"/>
    <FSDeviceSend PDin="PD" PortNum="valid" DCount="6" SDset="1" DCommErr="1" DTimeout="0" CRC="valid"/>
    <FSDeviceReceive PDout="PD" PortNum="invalid" MCount="0" setSD="0" ChFAckReq="0" CRC="valid"/>
    <Transition SourceState="WaitOnSPDU_26" TargetState="CheckSPDU_27"/>
    <Transition SourceState="CheckSPDU_27" TargetState="PrepareResponse_25"/>
    <Transition SourceState="PrepareResponse_25" TargetState="WaitOnSPDU_26"/>
    <FSDeviceSend PDin="PD" PortNum="valid" DCount="7" SDset="1" DCommErr="1" DTimeout="0" CRC="valid"/>
  </FSDeviceSclTestCaseSteps>
</Testroot>
```

9.2.44 Test script 44

Table 98 defines the test conditions for this test case. The associated XML file contains steps and message parameters for the state flow check in case of no error, MCount = 7, and Timeout.

Table 98 – FS-Device test script 44

TEST CASE ATTRIBUTES	IDENTIFICATION / REFERENCE
Identification (ID)	SDCI_FSTC_0095
Name	FSTCD_SCLD_FLOW_SETSD0MC7TO
Purpose (short)	
Equipment under test (EUT)	FS-Device
Test case version	1.0
Category / type	FS-Device automated SCL protocol test
Specification (clause)	[3] clause 11.3.3, Figure 37 (services); clause 11.5.3, Figure 42 (state chart)
Configuration / setup	See Table 54
TEST CASE	**CONDITIONS / PERFORMANCE**
Purpose (detailed)	Protocol flow in case of distinct error
Precondition	FS-Device waiting for the first message
Procedure	See XML file "IO-Link-Safety_spec_device_final_testsuite_testcase_44.xml"
Test parameter	See Table 54 and XML file
Post condition	–
TEST CASE RESULTS	**CHECK / REACTION**
Evaluation	Comparison of expected and received values according to the XML file
Test passed	Comparison OK
Test failed (examples)	Comparison not OK
Report	Printout of the automated SCL protocol tester <pass/fail>

Content of file "IO-Link-Safety_spec_device_final_testsuite_testcase_44.xml":

```xml
<?xml version="1.0" encoding="UTF-8"?>
<Testroot xsi:noNamespaceSchemaLocation="IO-Link-Safety-Test-Procedure_Types_V1.0.xsd"
xmlns:xsi="http://www.w3.org/2001/XMLSchema-instance" version="1.2" name="tc_44" date="20.11.2018: 14:01:13.946">
  <FSDeviceSclTestCaseSteps>
    <Transition SourceState="Init" TargetState="SystemStart_20"/>
    <Transition SourceState="SystemStart_20" TargetState="WaitOnSPDU_21"/>
    <FSDeviceReceive PDout="PD" PortNum="valid" MCount="7" setSD="0" ChFAckReq="0" CRC="valid"/>
    <Transition SourceState="WaitOnSPDU_21" TargetState="CheckSPDU_22"/>
    <Transition SourceState="CheckSPDU_22" TargetState="PrepareResponse_25"/>
    <Transition SourceState="PrepareResponse_25" TargetState="WaitOnSPDU_26"/>
    <FSDeviceSend PDin="PD" PortNum="valid" DCount="0" SDset="1" DCommErr="1" DTimeout="1" CRC="valid"/>
    <FSDeviceReceive PDout="PD" PortNum="valid" MCount="1" setSD="0" ChFAckReq="0" CRC="valid"/>
    <Transition SourceState="WaitOnSPDU_26" TargetState="CheckSPDU_27"/>
    <Transition SourceState="CheckSPDU_27" TargetState="PrepareResponse_25"/>
    <Transition SourceState="PrepareResponse_25" TargetState="WaitOnSPDU_26"/>
    <FSDeviceSend PDin="PD" PortNum="valid" DCount="6" SDset="1" DCommErr="1" DTimeout="0" CRC="valid"/>
    <FSDeviceReceive PDout="PD" PortNum="invalid" MCount="2" setSD="0" ChFAckReq="0" CRC="valid"/>
    <Transition SourceState="WaitOnSPDU_26" TargetState="CheckSPDU_27"/>
    <Transition SourceState="CheckSPDU_27" TargetState="PrepareResponse_25"/>
    <Transition SourceState="PrepareResponse_25" TargetState="WaitOnSPDU_26"/>
    <FSDeviceSend PDin="PD" PortNum="valid" DCount="5" SDset="1" DCommErr="1" DTimeout="0" CRC="valid"/>
  </FSDeviceSclTestCaseSteps>
</Testroot>
```

9.2.45 Test script 45

Table 99 defines the test conditions for this test case. The associated XML file contains steps and message parameters for the state flow check in case of a setSD error, MCount = 0, and DCommErr.

Table 99 – FS-Device test script 45

TEST CASE ATTRIBUTES	IDENTIFICATION / REFERENCE
Identification (ID)	SDCI_FSTC_0096
Name	FSTCD_SCLD_FLOW_SETSD1MC0DCE1
Purpose (short)	
Equipment under test (EUT)	FS-Device
Test case version	1.0
Category / type	FS-Device automated SCL protocol test
Specification (clause)	[3] clause 11.3.3, Figure 37 (services); clause 11.5.3, Figure 42 (state chart)
Configuration / setup	See Table 54
TEST CASE	**CONDITIONS / PERFORMANCE**
Purpose (detailed)	Protocol flow in case of distinct error
Precondition	FS-Device waiting for the first message
Procedure	See XML file "IO-Link-Safety_spec_device_final_testsuite_testcase_45.xml"
Test parameter	See Table 54 and XML file
Post condition	–
TEST CASE RESULTS	**CHECK / REACTION**
Evaluation	Comparison of expected and received values according to the XML file
Test passed	Comparison OK
Test failed (examples)	Comparison not OK
Report	Printout of the automated SCL protocol tester <pass/fail>

Content of file "IO-Link-Safety_spec_device_final_testsuite_testcase_45.xml":

```xml
<?xml version="1.0" encoding="UTF-8"?>
<Testroot xsi:noNamespaceSchemaLocation="IO-Link-Safety-Test-Procedure_Types_V1.0.xsd"
xmlns:xsi="http://www.w3.org/2001/XMLSchema-instance" version="1.2" name="tc_45" date="20.11.2018: 14:01:13.946">
  <FSDeviceSclTestCaseSteps>
    <Transition SourceState="Init" TargetState="SystemStart_20"/>
    <Transition SourceState="SystemStart_20" TargetState="WaitOnSPDU_21"/>
    <FSDeviceReceive PDout="PD" PortNum="valid" MCount="0" setSD="1" ChFAckReq="0" CRC="valid"/>
    <Transition SourceState="WaitOnSPDU_21" TargetState="CheckSPDU_22"/>
    <Transition SourceState="CheckSPDU_22" TargetState="PrepareResponse_23"/>
    <Transition SourceState="PrepareResponse_23" TargetState="WaitOnSPDU_24"/>
    <FSDeviceSend PDin="PD" PortNum="valid" DCount="7" SDset="1" DCommErr="0" DTimeout="0" CRC="valid"/>
    <FSDeviceReceive PDout="PD" PortNum="valid" MCount="1" setSD="0" ChFAckReq="0" CRC="invalid"/>
    <Transition SourceState="WaitOnSPDU_24" TargetState="PrepareResponse_25"/>
    <Transition SourceState="PrepareResponse_25" TargetState="WaitOnSPDU_26"/>
    <FSDeviceSend PDin="PD" PortNum="valid" DCount="6" SDset="1" DCommErr="1" DTimeout="0" CRC="valid"/>
    <FSDeviceReceive PDout="PD" PortNum="valid" MCount="3" setSD="0" ChFAckReq="0" CRC="valid"/>
    <Transition SourceState="WaitOnSPDU_26" TargetState="CheckSPDU_27"/>
    <Transition SourceState="CheckSPDU_27" TargetState="PrepareResponse_25"/>
    <Transition SourceState="PrepareResponse_25" TargetState="WaitOnSPDU_26"/>
    <FSDeviceSend PDin="PD" PortNum="valid" DCount="4" SDset="1" DCommErr="1" DTimeout="0" CRC="valid"/>
  </FSDeviceSclTestCaseSteps>
</Testroot>
```

9.2.46 Test script 46

Table 100 defines the test conditions for this test case. The associated XML file contains steps and message parameters for the state flow check in case of a setSD error, MCount = 0, and DCommErr.

Table 100 – FS-Device test script 46

TEST CASE ATTRIBUTES	IDENTIFICATION / REFERENCE
Identification (ID)	SDCI_FSTC_0097
Name	FSTCD_SCLD_FLOW_SETSD1MC0DCE1
Purpose (short)	
Equipment under test (EUT)	FS-Device
Test case version	1.0
Category / type	FS-Device automated SCL protocol test
Specification (clause)	[3] clause 11.3.3, Figure 37 (services); clause 11.5.3, Figure 42 (state chart)
Configuration / setup	See Table 54
TEST CASE	**CONDITIONS / PERFORMANCE**
Purpose (detailed)	Protocol flow in case of distinct error
Precondition	FS-Device waiting for the first message
Procedure	See XML file "IO-Link-Safety_spec_device_final_testsuite_testcase_46.xml"
Test parameter	See Table 54 and XML file
Post condition	–
TEST CASE RESULTS	**CHECK / REACTION**
Evaluation	Comparison of expected and received values according to the XML file
Test passed	Comparison OK
Test failed (examples)	Comparison not OK
Report	Printout of the automated SCL protocol tester <pass/fail>

Content of file "IO-Link-Safety_spec_device_final_testsuite_testcase_46.xml":

```xml
<?xml version="1.0" encoding="UTF-8"?>
<Testroot xsi:noNamespaceSchemaLocation="IO-Link-Safety-Test-Procedure_Types_V1.0.xsd"
xmlns:xsi="http://www.w3.org/2001/XMLSchema-instance" version="1.2" name="tc_46" date="20.11.2018: 14:01:13.946">
  <FSDeviceSclTestCaseSteps>
    <Transition SourceState="Init" TargetState="SystemStart_20"/>
    <Transition SourceState="SystemStart_20" TargetState="WaitOnSPDU_21"/>
    <FSDeviceReceive PDout="PD" PortNum="valid" MCount="0" setSD="1" ChFAckReq="0" CRC="valid"/>
    <Transition SourceState="WaitOnSPDU_21" TargetState="CheckSPDU_22"/>
    <Transition SourceState="CheckSPDU_22" TargetState="PrepareResponse_23"/>
    <Transition SourceState="PrepareResponse_23" TargetState="WaitOnSPDU_24"/>
    <FSDeviceSend PDin="PD" PortNum="valid" DCount="7" SDset="1" DCommErr="0" DTimeout="0" CRC="valid"/>
    <FSDeviceReceive PDout="PD" PortNum="valid" MCount="2" setSD="0" ChFAckReq="0" CRC="invalid"/>
    <Transition SourceState="WaitOnSPDU_24" TargetState="PrepareResponse_25"/>
    <Transition SourceState="PrepareResponse_25" TargetState="WaitOnSPDU_26"/>
    <FSDeviceSend PDin="PD" PortNum="valid" DCount="5" SDset="1" DCommErr="1" DTimeout="0" CRC="valid"/>
    <FSDeviceReceive PDout="PD" PortNum="valid" MCount="4" setSD="0" ChFAckReq="0" CRC="valid"/>
    <Transition SourceState="WaitOnSPDU_26" TargetState="CheckSPDU_27"/>
    <Transition SourceState="CheckSPDU_27" TargetState="PrepareResponse_25"/>
    <Transition SourceState="PrepareResponse_25" TargetState="WaitOnSPDU_26"/>
    <FSDeviceSend PDin="PD" PortNum="valid" DCount="3" SDset="1" DCommErr="1" DTimeout="0" CRC="valid"/>
  </FSDeviceSclTestCaseSteps>
</Testroot>
```

9.2.47 Test script 47

Table 101 defines the test conditions for this test case. The associated XML file contains steps and message parameters for the state flow check in case of a setSD error, MCount = 0, and DCommErr.

Table 101 – FS-Device test script 47

TEST CASE ATTRIBUTES	IDENTIFICATION / REFERENCE
Identification (ID)	SDCI_FSTC_0098
Name	FSTCD_SCLD_FLOW_SETSD1MC0DCE1
Purpose (short)	
Equipment under test (EUT)	FS-Device
Test case version	1.0
Category / type	FS-Device automated SCL protocol test
Specification (clause)	[3] clause 11.3.3, Figure 37 (services); clause 11.5.3, Figure 42 (state chart)
Configuration / setup	See Table 54
TEST CASE	**CONDITIONS / PERFORMANCE**
Purpose (detailed)	Protocol flow in case of distinct error
Precondition	FS-Device waiting for the first message
Procedure	See XML file "IO-Link-Safety_spec_device_final_testsuite_testcase_47.xml"
Test parameter	See Table 54 and XML file
Post condition	–
TEST CASE RESULTS	**CHECK / REACTION**
Evaluation	Comparison of expected and received values according to the XML file
Test passed	Comparison OK
Test failed (examples)	Comparison not OK
Report	Printout of the automated SCL protocol tester <pass/fail>

Content of file "IO-Link-Safety_spec_device_final_testsuite_testcase_47.xml":

```xml
<?xml version="1.0" encoding="UTF-8"?>
<Testroot xsi:noNamespaceSchemaLocation="IO-Link-Safety-Test-Procedure_Types_V1.0.xsd"
xmlns:xsi="http://www.w3.org/2001/XMLSchema-instance" version="1.2" name="tc_47" date="20.11.2018: 14:01:13.946">
  <FSDeviceSclTestCaseSteps>
    <Transition SourceState="Init" TargetState="SystemStart_20"/>
    <Transition SourceState="SystemStart_20" TargetState="WaitOnSPDU_21"/>
    <FSDeviceReceive PDout="PD" PortNum="valid" MCount="0" setSD="1" ChFAckReq="0" CRC="valid"/>
    <Transition SourceState="WaitOnSPDU_21" TargetState="CheckSPDU_22"/>
    <Transition SourceState="CheckSPDU_22" TargetState="PrepareResponse_23"/>
    <Transition SourceState="PrepareResponse_23" TargetState="WaitOnSPDU_24"/>
    <FSDeviceSend PDin="PD" PortNum="valid" DCount="7" SDset="1" DCommErr="0" DTimeout="0" CRC="valid"/>
    <FSDeviceReceive PDout="PD" PortNum="valid" MCount="3" setSD="0" ChFAckReq="0" CRC="invalid"/>
    <Transition SourceState="WaitOnSPDU_24" TargetState="PrepareResponse_25"/>
    <Transition SourceState="PrepareResponse_25" TargetState="WaitOnSPDU_26"/>
    <FSDeviceSend PDin="PD" PortNum="valid" DCount="4" SDset="1" DCommErr="1" DTimeout="0" CRC="valid"/>
    <FSDeviceReceive PDout="PD" PortNum="valid" MCount="5" setSD="0" ChFAckReq="0" CRC="valid"/>
    <Transition SourceState="WaitOnSPDU_26" TargetState="CheckSPDU_27"/>
    <Transition SourceState="CheckSPDU_27" TargetState="PrepareResponse_25"/>
    <Transition SourceState="PrepareResponse_25" TargetState="WaitOnSPDU_26"/>
    <FSDeviceSend PDin="PD" PortNum="valid" DCount="2" SDset="1" DCommErr="1" DTimeout="0" CRC="valid"/>
  </FSDeviceSclTestCaseSteps>
</Testroot>
```

9.2.48 Test script 48

Table 102 defines the test conditions for this test case. The associated XML file contains steps and message parameters for the state flow check in case of setSD error, MCount = 0, and DCommErr.

Table 102 – FS-Device test script 48

TEST CASE ATTRIBUTES	IDENTIFICATION / REFERENCE
Identification (ID)	SDCI_FSTC_0099
Name	FSTCD_SCLD_FLOW_SETSD1MC0DCE1
Purpose (short)	
Equipment under test (EUT)	FS-Device
Test case version	1.0
Category / type	FS-Device automated SCL protocol test
Specification (clause)	[3] clause 11.3.3, Figure 37 (services); clause 11.5.3, Figure 42 (state chart)
Configuration / setup	See Table 54
TEST CASE	**CONDITIONS / PERFORMANCE**
Purpose (detailed)	Protocol flow in case of distinct error
Precondition	FS-Device waiting for the first message
Procedure	See XML file "IO-Link-Safety_spec_device_final_testsuite_testcase_48.xml"
Test parameter	See Table 54 and XML file
Post condition	–
TEST CASE RESULTS	**CHECK / REACTION**
Evaluation	Comparison of expected and received values according to the XML file
Test passed	Comparison OK
Test failed (examples)	Comparison not OK
Report	Printout of the automated SCL protocol tester <pass/fail>

Content of file "IO-Link-Safety_spec_device_final_testsuite_testcase_48.xml":

```xml
<?xml version="1.0" encoding="UTF-8"?>
<Testroot xsi:noNamespaceSchemaLocation="IO-Link-Safety-Test-Procedure_Types_V1.0.xsd"
xmlns:xsi="http://www.w3.org/2001/XMLSchema-instance" version="1.2" name="tc_48" date="20.11.2018: 14:01:13.947">
  <FSDeviceSclTestCaseSteps>
    <Transition SourceState="Init" TargetState="SystemStart_20"/>
    <Transition SourceState="SystemStart_20" TargetState="WaitOnSPDU_21"/>
    <FSDeviceReceive PDout="PD" PortNum="valid" MCount="0" setSD="1" ChFAckReq="0" CRC="valid"/>
    <Transition SourceState="WaitOnSPDU_21" TargetState="CheckSPDU_22"/>
    <Transition SourceState="CheckSPDU_22" TargetState="PrepareResponse_23"/>
    <Transition SourceState="PrepareResponse_23" TargetState="WaitOnSPDU_24"/>
    <FSDeviceSend PDin="PD" PortNum="valid" DCount="7" SDset="1" DCommErr="0" DTimeout="0" CRC="valid"/>
    <FSDeviceReceive PDout="PD" PortNum="valid" MCount="4" setSD="0" ChFAckReq="0" CRC="invalid"/>
    <Transition SourceState="WaitOnSPDU_24" TargetState="PrepareResponse_25"/>
    <Transition SourceState="PrepareResponse_25" TargetState="WaitOnSPDU_26"/>
    <FSDeviceSend PDin="PD" PortNum="valid" DCount="3" SDset="1" DCommErr="1" DTimeout="0" CRC="valid"/>
    <FSDeviceReceive PDout="PD" PortNum="valid" MCount="6" setSD="0" ChFAckReq="0" CRC="valid"/>
    <Transition SourceState="WaitOnSPDU_26" TargetState="CheckSPDU_27"/>
    <Transition SourceState="CheckSPDU_27" TargetState="PrepareResponse_25"/>
    <Transition SourceState="PrepareResponse_25" TargetState="WaitOnSPDU_26"/>
    <FSDeviceSend PDin="PD" PortNum="valid" DCount="1" SDset="1" DCommErr="1" DTimeout="0" CRC="valid"/>
  </FSDeviceSclTestCaseSteps>
</Testroot>
```

9.2.49 Test script 49

Table 103 defines the test conditions for this test case. The associated XML file contains steps and message parameters for the state flow check in case of setSD error, MCount = 0, and DCommErr.

Table 103 – FS-Device test script 49

TEST CASE ATTRIBUTES	IDENTIFICATION / REFERENCE
Identification (ID)	SDCI_FSTC_0100
Name	FSTCD_SCLD_FLOW_SETSD1MC0DCE1
Purpose (short)	
Equipment under test (EUT)	FS-Device
Test case version	1.0
Category / type	FS-Device automated SCL protocol test
Specification (clause)	[3] clause 11.3.3, Figure 37 (services); clause 11.5.3, Figure 42 (state chart)
Configuration / setup	See Table 54
TEST CASE	**CONDITIONS / PERFORMANCE**
Purpose (detailed)	Protocol flow in case of distinct error
Precondition	FS-Device waiting for the first message
Procedure	See XML file "IO-Link-Safety_spec_device_final_testsuite_testcase_49.xml"
Test parameter	See Table 54 and XML file
Post condition	–
TEST CASE RESULTS	**CHECK / REACTION**
Evaluation	Comparison of expected and received values according to the XML file
Test passed	Comparison OK
Test failed (examples)	Comparison not OK
Report	Printout of the automated SCL protocol tester <pass/fail>

Content of file "IO-Link-Safety_spec_device_final_testsuite_testcase_49.xml":

```xml
<?xml version="1.0" encoding="UTF-8"?>
<Testroot xsi:noNamespaceSchemaLocation="IO-Link-Safety-Test-Procedure_Types_V1.0.xsd"
xmlns:xsi="http://www.w3.org/2001/XMLSchema-instance" version="1.2" name="tc_49" date="20.11.2018: 14:01:13.947">
  <FSDeviceSclTestCaseSteps>
    <Transition SourceState="Init" TargetState="SystemStart_20"/>
    <Transition SourceState="SystemStart_20" TargetState="WaitOnSPDU_21"/>
    <FSDeviceReceive PDout="PD" PortNum="valid" MCount="0" setSD="1" ChFAckReq="0" CRC="valid"/>
    <Transition SourceState="WaitOnSPDU_21" TargetState="CheckSPDU_22"/>
    <Transition SourceState="CheckSPDU_22" TargetState="PrepareResponse_23"/>
    <Transition SourceState="PrepareResponse_23" TargetState="WaitOnSPDU_24"/>
    <FSDeviceSend PDin="PD" PortNum="valid" DCount="7" SDset="1" DCommErr="0" DTimeout="0" CRC="valid"/>
    <FSDeviceReceive PDout="PD" PortNum="valid" MCount="5" setSD="0" ChFAckReq="0" CRC="invalid"/>
    <Transition SourceState="WaitOnSPDU_24" TargetState="PrepareResponse_25"/>
    <Transition SourceState="PrepareResponse_25" TargetState="WaitOnSPDU_26"/>
    <FSDeviceSend PDin="PD" PortNum="valid" DCount="2" SDset="1" DCommErr="1" DTimeout="0" CRC="valid"/>
    <FSDeviceReceive PDout="PD" PortNum="valid" MCount="7" setSD="0" ChFAckReq="0" CRC="valid"/>
    <Transition SourceState="WaitOnSPDU_26" TargetState="CheckSPDU_27"/>
    <Transition SourceState="CheckSPDU_27" TargetState="PrepareResponse_25"/>
    <Transition SourceState="PrepareResponse_25" TargetState="WaitOnSPDU_26"/>
    <FSDeviceSend PDin="PD" PortNum="valid" DCount="0" SDset="1" DCommErr="1" DTimeout="0" CRC="valid"/>
  </FSDeviceSclTestCaseSteps>
</Testroot>
```

9.2.50 Test script 50

Table 104 defines the test conditions for this test case. The associated XML file contains steps and message parameters for the state flow check in case of no error, MCount = 2, and Timeout.

Table 104 – FS-Device test script 50

TEST CASE ATTRIBUTES	IDENTIFICATION / REFERENCE
Identification (ID)	SDCI_FSTC_0101
Name	FSTCD_SCLD_FLOW_SETSD0MC2TO
Purpose (short)	
Equipment under test (EUT)	FS-Device
Test case version	1.0
Category / type	FS-Device automated SCL protocol test
Specification (clause)	[3] clause 11.3.3, Figure 37 (services); clause 11.5.3, Figure 42 (state chart)
Configuration / setup	See Table 54
TEST CASE	**CONDITIONS / PERFORMANCE**
Purpose (detailed)	Protocol flow in case of distinct error
Precondition	FS-Device waiting for the first message
Procedure	See XML file "IO-Link-Safety_spec_device_final_testsuite_testcase_50.xml"
Test parameter	See Table 54 and XML file
Post condition	–
TEST CASE RESULTS	**CHECK / REACTION**
Evaluation	Comparison of expected and received values according to the XML file
Test passed	Comparison OK
Test failed (examples)	Comparison not OK
Report	Printout of the automated SCL protocol tester <pass/fail>

Content of file "IO-Link-Safety_spec_device_final_testsuite_testcase_50.xml":

```xml
<?xml version="1.0" encoding="UTF-8"?>
<Testroot xsi:noNamespaceSchemaLocation="IO-Link-Safety-Test-Procedure_Types_V1.0.xsd"
xmlns:xsi="http://www.w3.org/2001/XMLSchema-instance" version="1.2" name="tc_50" date="20.11.2018: 14:01:13.947">
  <FSDeviceSclTestCaseSteps>
    <Transition SourceState="Init" TargetState="SystemStart_20"/>
    <Transition SourceState="SystemStart_20" TargetState="WaitOnSPDU_21"/>
    <FSDeviceReceive PDout="PD" PortNum="valid" MCount="2" setSD="0" ChFAckReq="0" CRC="valid"/>
    <Transition SourceState="WaitOnSPDU_21" TargetState="CheckSPDU_22"/>
    <Transition SourceState="CheckSPDU_22" TargetState="PrepareResponse_25"/>
    <Transition SourceState="PrepareResponse_25" TargetState="WaitOnSPDU_26"/>
    <FSDeviceSend PDin="PD" PortNum="valid" DCount="5" SDset="1" DCommErr="1" DTimeout="1" CRC="valid"/>
    <FSDeviceReceive PDout="PD" PortNum="valid" MCount="3" setSD="0" ChFAckReq="0" CRC="valid"/>
    <Transition SourceState="WaitOnSPDU_26" TargetState="CheckSPDU_27"/>
    <Transition SourceState="CheckSPDU_27" TargetState="PrepareResponse_25"/>
    <Transition SourceState="PrepareResponse_25" TargetState="WaitOnSPDU_26"/>
    <FSDeviceSend PDin="PD" PortNum="valid" DCount="4" SDset="1" DCommErr="1" DTimeout="0" CRC="valid"/>
    <FSDeviceReceive PDout="PD" PortNum="valid" MCount="0" setSD="0" ChFAckReq="0" CRC="invalid"/>
    <Transition SourceState="WaitOnSPDU_26" TargetState="CheckSPDU_27"/>
    <Transition SourceState="CheckSPDU_27" TargetState="PrepareResponse_25"/>
    <Transition SourceState="PrepareResponse_25" TargetState="WaitOnSPDU_26"/>
    <FSDeviceSend PDin="PD" PortNum="valid" DCount="7" SDset="1" DCommErr="1" DTimeout="0" CRC="valid"/>
  </FSDeviceSclTestCaseSteps>
</Testroot>
```

9.2.51 Test script 51

Table 105 defines the test conditions for this test case. The associated XML file contains steps and message parameters for the state flow check in case of no error, MCount = 2, and DCommErr.

Table 105 – FS-Device test script 51

TEST CASE ATTRIBUTES	IDENTIFICATION / REFERENCE
Identification (ID)	SDCI_FSTC_0102
Name	FSTCD_SCLD_FLOW_SETSD0MC2DCE1
Purpose (short)	
Equipment under test (EUT)	FS-Device
Test case version	1.0
Category / type	FS-Device automated SCL protocol test
Specification (clause)	[3] clause 11.3.3, Figure 37 (services); clause 11.5.3, Figure 42 (state chart)
Configuration / setup	See Table 54
TEST CASE	**CONDITIONS / PERFORMANCE**
Purpose (detailed)	Protocol flow in case of distinct error
Precondition	FS-Device waiting for the first message
Procedure	See XML file "IO-Link-Safety_spec_device_final_testsuite_testcase_51.xml"
Test parameter	See Table 54 and XML file
Post condition	–
TEST CASE RESULTS	**CHECK / REACTION**
Evaluation	Comparison of expected and received values according to the XML file
Test passed	Comparison OK
Test failed (examples)	Comparison not OK
Report	Printout of the automated SCL protocol tester <pass/fail>

Content of file "IO-Link-Safety_spec_device_final_testsuite_testcase_51.xml":

```xml
<?xml version="1.0" encoding="UTF-8"?>
<Testroot xsi:noNamespaceSchemaLocation="IO-Link-Safety-Test-Procedure_Types_V1.0.xsd"
xmlns:xsi="http://www.w3.org/2001/XMLSchema-instance" version="1.2" name="tc_51" date="20.11.2018: 14:01:13.947">
  <FSDeviceSclTestCaseSteps>
    <Transition SourceState="Init" TargetState="SystemStart_20"/>
    <Transition SourceState="SystemStart_20" TargetState="WaitOnSPDU_21"/>
    <FSDeviceReceive PDout="PD" PortNum="valid" MCount="2" setSD="0" ChFAckReq="0" CRC="valid"/>
    <Transition SourceState="WaitOnSPDU_21" TargetState="CheckSPDU_22"/>
    <Transition SourceState="CheckSPDU_22" TargetState="PrepareResponse_25"/>
    <Transition SourceState="PrepareResponse_25" TargetState="WaitOnSPDU_26"/>
    <FSDeviceSend PDin="PD" PortNum="valid" DCount="5" SDset="1" DCommErr="1" DTimeout="1" CRC="valid"/>
    <FSDeviceReceive PDout="PD" PortNum="valid" MCount="3" setSD="0" ChFAckReq="0" CRC="valid"/>
    <Transition SourceState="WaitOnSPDU_26" TargetState="CheckSPDU_27"/>
    <Transition SourceState="CheckSPDU_27" TargetState="PrepareResponse_25"/>
    <Transition SourceState="PrepareResponse_25" TargetState="WaitOnSPDU_26"/>
    <FSDeviceSend PDin="PD" PortNum="valid" DCount="4" SDset="1" DCommErr="1" DTimeout="0" CRC="valid"/>
    <FSDeviceReceive PDout="PD" PortNum="valid" MCount="4" setSD="0" ChFAckReq="0" CRC="invalid"/>
    <Transition SourceState="WaitOnSPDU_26" TargetState="CheckSPDU_27"/>
    <Transition SourceState="CheckSPDU_27" TargetState="PrepareResponse_25"/>
    <Transition SourceState="PrepareResponse_25" TargetState="WaitOnSPDU_26"/>
    <FSDeviceSend PDin="PD" PortNum="valid" DCount="3" SDset="1" DCommErr="1" DTimeout="0" CRC="valid"/>
  </FSDeviceSclTestCaseSteps>
</Testroot>
```

9.2.52 Test script 52

Table 106 defines the test conditions for this test case. The associated XML file contains steps and message parameters for the state flow check in case of no error, MCount = 3, and Timeout.

Table 106 – FS-Device test script 52

TEST CASE ATTRIBUTES	IDENTIFICATION / REFERENCE
Identification (ID)	SDCI_FSTC_0103
Name	FSTCD_SCLD_FLOW_SETSD0MC3TO
Purpose (short)	
Equipment under test (EUT)	FS-Device
Test case version	1.0
Category / type	FS-Device automated SCL protocol test
Specification (clause)	[3] clause 11.3.3, Figure 37 (services); clause 11.5.3, Figure 42 (state chart)
Configuration / setup	See Table 54
TEST CASE	**CONDITIONS / PERFORMANCE**
Purpose (detailed)	Protocol flow in case of distinct error
Precondition	FS-Device waiting for the first message
Procedure	See XML file "IO-Link-Safety_spec_device_final_testsuite_testcase_52.xml"
Test parameter	See Table 54 and XML file
Post condition	–
TEST CASE RESULTS	**CHECK / REACTION**
Evaluation	Comparison of expected and received values according to the XML file
Test passed	Comparison OK
Test failed (examples)	Comparison not OK
Report	Printout of the automated SCL protocol tester <pass/fail>

Content of file "IO-Link-Safety_spec_device_final_testsuite_testcase_52.xml":

```xml
<?xml version="1.0" encoding="UTF-8"?>
<Testroot xsi:noNamespaceSchemaLocation="IO-Link-Safety-Test-Procedure_Types_V1.0.xsd"
xmlns:xsi="http://www.w3.org/2001/XMLSchema-instance" version="1.2" name="tc_52" date="20.11.2018: 14:01:13.947">
  <FSDeviceSclTestCaseSteps>
    <Transition SourceState="Init" TargetState="SystemStart_20"/>
    <Transition SourceState="SystemStart_20" TargetState="WaitOnSPDU_21"/>
    <FSDeviceReceive PDout="PD" PortNum="valid" MCount="3" setSD="0" ChFAckReq="0" CRC="valid"/>
    <Transition SourceState="WaitOnSPDU_21" TargetState="CheckSPDU_22"/>
    <Transition SourceState="CheckSPDU_22" TargetState="PrepareResponse_25"/>
    <Transition SourceState="PrepareResponse_25" TargetState="WaitOnSPDU_26"/>
    <FSDeviceSend PDin="PD" PortNum="valid" DCount="4" SDset="1" DCommErr="1" DTimeout="1" CRC="valid"/>
    <FSDeviceReceive PDout="PD" PortNum="valid" MCount="4" setSD="0" ChFAckReq="0" CRC="valid"/>
    <Transition SourceState="WaitOnSPDU_26" TargetState="CheckSPDU_27"/>
    <Transition SourceState="CheckSPDU_27" TargetState="PrepareResponse_25"/>
    <Transition SourceState="PrepareResponse_25" TargetState="WaitOnSPDU_26"/>
    <FSDeviceSend PDin="PD" PortNum="valid" DCount="3" SDset="1" DCommErr="1" DTimeout="0" CRC="valid"/>
    <FSDeviceReceive PDout="PD" PortNum="valid" MCount="0" setSD="0" ChFAckReq="0" CRC="invalid"/>
    <Transition SourceState="WaitOnSPDU_26" TargetState="CheckSPDU_27"/>
    <Transition SourceState="CheckSPDU_27" TargetState="PrepareResponse_25"/>
    <Transition SourceState="PrepareResponse_25" TargetState="WaitOnSPDU_26"/>
    <FSDeviceSend PDin="PD" PortNum="valid" DCount="7" SDset="1" DCommErr="1" DTimeout="0" CRC="valid"/>
  </FSDeviceSclTestCaseSteps>
</Testroot>
```

9.2.53 Test script 53

Table 107 defines the test conditions for this test case. The associated XML file contains steps and message parameters for the state flow check in case of no error, MCount = 3, and Timeout.

Table 107 – FS-Device test script 53

TEST CASE ATTRIBUTES	IDENTIFICATION / REFERENCE
Identification (ID)	SDCI_FSTC_0104
Name	FSTCD_SCLD_FLOW_SETSD0MC3TO
Purpose (short)	
Equipment under test (EUT)	FS-Device
Test case version	1.0
Category / type	FS-Device automated SCL protocol test
Specification (clause)	[3] clause 11.3.3, Figure 37 (services); clause 11.5.3, Figure 42 (state chart)
Configuration / setup	See Table 54
TEST CASE	**CONDITIONS / PERFORMANCE**
Purpose (detailed)	Protocol flow in case of distinct error
Precondition	FS-Device waiting for the first message
Procedure	See XML file "IO-Link-Safety_spec_device_final_testsuite_testcase_53.xml"
Test parameter	See Table 54 and XML file
Post condition	–
TEST CASE RESULTS	**CHECK / REACTION**
Evaluation	Comparison of expected and received values according to the XML file
Test passed	Comparison OK
Test failed (examples)	Comparison not OK
Report	Printout of the automated SCL protocol tester <pass/fail>

Content of file "IO-Link-Safety_spec_device_final_testsuite_testcase_53.xml":

```xml
<?xml version="1.0" encoding="UTF-8"?>
<Testroot xsi:noNamespaceSchemaLocation="IO-Link-Safety-Test-Procedure_Types_V1.0.xsd"
xmlns:xsi="http://www.w3.org/2001/XMLSchema-instance" version="1.2" name="tc_53" date="20.11.2018: 14:01:13.947">
  <FSDeviceSclTestCaseSteps>
    <Transition SourceState="Init" TargetState="SystemStart_20"/>
    <Transition SourceState="SystemStart_20" TargetState="WaitOnSPDU_21"/>
    <FSDeviceReceive PDout="PD" PortNum="valid" MCount="3" setSD="0" ChFAckReq="0" CRC="valid"/>
    <Transition SourceState="WaitOnSPDU_21" TargetState="CheckSPDU_22"/>
    <Transition SourceState="CheckSPDU_22" TargetState="PrepareResponse_25"/>
    <Transition SourceState="PrepareResponse_25" TargetState="WaitOnSPDU_26"/>
    <FSDeviceSend PDin="PD" PortNum="valid" DCount="4" SDset="1" DCommErr="1" DTimeout="1" CRC="valid"/>
    <FSDeviceReceive PDout="PD" PortNum="valid" MCount="4" setSD="0" ChFAckReq="0" CRC="valid"/>
    <Transition SourceState="WaitOnSPDU_26" TargetState="CheckSPDU_27"/>
    <Transition SourceState="CheckSPDU_27" TargetState="PrepareResponse_25"/>
    <Transition SourceState="PrepareResponse_25" TargetState="WaitOnSPDU_26"/>
    <FSDeviceSend PDin="PD" PortNum="valid" DCount="3" SDset="1" DCommErr="1" DTimeout="0" CRC="valid"/>
    <FSDeviceReceive PDout="PD" PortNum="valid" MCount="5" setSD="0" ChFAckReq="0" CRC="invalid"/>
    <Transition SourceState="WaitOnSPDU_26" TargetState="CheckSPDU_27"/>
    <Transition SourceState="CheckSPDU_27" TargetState="PrepareResponse_25"/>
    <Transition SourceState="PrepareResponse_25" TargetState="WaitOnSPDU_26"/>
    <FSDeviceSend PDin="PD" PortNum="valid" DCount="2" SDset="1" DCommErr="1" DTimeout="0" CRC="valid"/>
  </FSDeviceSclTestCaseSteps>
</Testroot>
```

9.2.54 Test script 54

Table 108 defines the test conditions for this test case. The associated XML file contains steps and message parameters for the state flow check in case of no error, MCount = 4, and Timeout.

Table 108 – FS-Device test script 54

TEST CASE ATTRIBUTES	IDENTIFICATION / REFERENCE
Identification (ID)	SDCI_FSTC_0105
Name	FSTCD_SCLD_FLOW_SETSD0MC4TO
Purpose (short)	
Equipment under test (EUT)	FS-Device
Test case version	1.0
Category / type	FS-Device automated SCL protocol test
Specification (clause)	[3] clause 11.3.3, Figure 37 (services); clause 11.5.3, Figure 42 (state chart)
Configuration / setup	See Table 54
TEST CASE	**CONDITIONS / PERFORMANCE**
Purpose (detailed)	Protocol flow in case of distinct error
Precondition	FS-Device waiting for the first message
Procedure	See XML file "IO-Link-Safety_spec_device_final_testsuite_testcase_54.xml"
Test parameter	See Table 54 and XML file
Post condition	–
TEST CASE RESULTS	**CHECK / REACTION**
Evaluation	Comparison of expected and received values according to the XML file
Test passed	Comparison OK
Test failed (examples)	Comparison not OK
Report	Printout of the automated SCL protocol tester <pass/fail>

Content of file "IO-Link-Safety_spec_device_final_testsuite_testcase_54.xml":

```xml
<?xml version="1.0" encoding="UTF-8"?>
<Testroot xsi:noNamespaceSchemaLocation="IO-Link-Safety-Test-Procedure_Types_V1.0.xsd"
xmlns:xsi="http://www.w3.org/2001/XMLSchema-instance" version="1.2" name="tc_54" date="20.11.2018: 14:01:13.947">
  <FSDeviceSclTestCaseSteps>
    <Transition SourceState="Init" TargetState="SystemStart_20"/>
    <Transition SourceState="SystemStart_20" TargetState="WaitOnSPDU_21"/>
    <FSDeviceReceive PDout="PD" PortNum="valid" MCount="4" setSD="0" ChFAckReq="0" CRC="valid"/>
    <Transition SourceState="WaitOnSPDU_21" TargetState="CheckSPDU_22"/>
    <Transition SourceState="CheckSPDU_22" TargetState="PrepareResponse_25"/>
    <Transition SourceState="PrepareResponse_25" TargetState="WaitOnSPDU_26"/>
    <FSDeviceSend PDin="PD" PortNum="valid" DCount="3" SDset="1" DCommErr="1" DTimeout="1" CRC="valid"/>
    <FSDeviceReceive PDout="PD" PortNum="valid" MCount="5" setSD="0" ChFAckReq="0" CRC="valid"/>
    <Transition SourceState="WaitOnSPDU_26" TargetState="CheckSPDU_27"/>
    <Transition SourceState="CheckSPDU_27" TargetState="PrepareResponse_25"/>
    <Transition SourceState="PrepareResponse_25" TargetState="WaitOnSPDU_26"/>
    <FSDeviceSend PDin="PD" PortNum="valid" DCount="2" SDset="1" DCommErr="1" DTimeout="0" CRC="valid"/>
    <FSDeviceReceive PDout="PD" PortNum="valid" MCount="0" setSD="0" ChFAckReq="0" CRC="invalid"/>
    <Transition SourceState="WaitOnSPDU_26" TargetState="CheckSPDU_27"/>
    <Transition SourceState="CheckSPDU_27" TargetState="PrepareResponse_25"/>
    <Transition SourceState="PrepareResponse_25" TargetState="WaitOnSPDU_26"/>
    <FSDeviceSend PDin="PD" PortNum="valid" DCount="7" SDset="1" DCommErr="1" DTimeout="0" CRC="valid"/>
  </FSDeviceSclTestCaseSteps>
</Testroot>
```

9.2.55 Test script 55

Table 109 defines the test conditions for this test case. The associated XML file contains steps and message parameters for the state flow check in case of setSD error, MCount = 0, and DCommErr.

Table 109 – FS-Device test script 55

TEST CASE ATTRIBUTES	IDENTIFICATION / REFERENCE
Identification (ID)	SDCI_FSTC_0106
Name	FSTCD_SCLD_FLOW_SETSD1MC0DCE1
Purpose (short)	
Equipment under test (EUT)	FS-Device
Test case version	1.0
Category / type	FS-Device automated SCL protocol test
Specification (clause)	[3] clause 11.3.3, Figure 37 (services); clause 11.5.3, Figure 42 (state chart)
Configuration / setup	See Table 54
TEST CASE	**CONDITIONS / PERFORMANCE**
Purpose (detailed)	Protocol flow in case of distinct error
Precondition	FS-Device waiting for the first message
Procedure	See XML file "IO-Link-Safety_spec_device_final_testsuite_testcase_55.xml"
Test parameter	See Table 54 and XML file
Post condition	–
TEST CASE RESULTS	**CHECK / REACTION**
Evaluation	Comparison of expected and received values according to the XML file
Test passed	Comparison OK
Test failed (examples)	Comparison not OK
Report	Printout of the automated SCL protocol tester <pass/fail>

Content of file "IO-Link-Safety_spec_device_final_testsuite_testcase_55.xml":

```xml
<?xml version="1.0" encoding="UTF-8"?>
<Testroot xsi:noNamespaceSchemaLocation="IO-Link-Safety-Test-Procedure_Types_V1.0.xsd"
xmlns:xsi="http://www.w3.org/2001/XMLSchema-instance" version="1.2" name="tc_55" date="20.11.2018: 14:01:13.947">
  <FSDeviceSclTestCaseSteps>
    <Transition SourceState="Init" TargetState="SystemStart_20"/>
    <Transition SourceState="SystemStart_20" TargetState="WaitOnSPDU_21"/>
    <FSDeviceReceive PDout="PD" PortNum="valid" MCount="0" setSD="1" ChFAckReq="0" CRC="valid"/>
    <Transition SourceState="WaitOnSPDU_21" TargetState="CheckSPDU_22"/>
    <Transition SourceState="CheckSPDU_22" TargetState="PrepareResponse_23"/>
    <Transition SourceState="PrepareResponse_23" TargetState="WaitOnSPDU_24"/>
    <FSDeviceSend PDin="PD" PortNum="valid" DCount="7" SDset="1" DCommErr="0" DTimeout="0" CRC="valid"/>
    <FSDeviceReceive PDout="PD" PortNum="valid" MCount="1" setSD="0" ChFAckReq="0" CRC="valid"/>
    <Transition SourceState="WaitOnSPDU_24" TargetState="CheckSPDU_22"/>
    <Transition SourceState="CheckSPDU_22" TargetState="PrepareResponse_23"/>
    <Transition SourceState="PrepareResponse_23" TargetState="WaitOnSPDU_24"/>
    <FSDeviceSend PDin="PD" PortNum="valid" DCount="6" SDset="1" DCommErr="0" DTimeout="0" CRC="valid"/>
    <FSDeviceReceive PDout="PD" PortNum="valid" MCount="3" setSD="0" ChFAckReq="0" CRC="valid"/>
    <Transition SourceState="WaitOnSPDU_24" TargetState="CheckSPDU_22"/>
    <Transition SourceState="CheckSPDU_22" TargetState="PrepareResponse_25"/>
    <Transition SourceState="PrepareResponse_25" TargetState="WaitOnSPDU_26"/>
    <FSDeviceSend PDin="PD" PortNum="valid" DCount="4" SDset="1" DCommErr="1" DTimeout="0" CRC="valid"/>
  </FSDeviceSclTestCaseSteps>
</Testroot>
```

9.2.56 Test script 56

Table 110 defines the test conditions for this test case. The associated XML file contains steps and message parameters for the state flow check in case of setSD error and MCount = 0.

Table 110 – FS-Device test script 56

TEST CASE ATTRIBUTES	IDENTIFICATION / REFERENCE
Identification (ID)	SDCI_FSTC_0107
Name	FSTCD_SCLD_FLOW_SETSD1MC0
Purpose (short)	
Equipment under test (EUT)	FS-Device
Test case version	1.0
Category / type	FS-Device automated SCL protocol test
Specification (clause)	[3] clause 11.3.3, Figure 37 (services); clause 11.5.3, Figure 42 (state chart)
Configuration / setup	See Table 54
TEST CASE	**CONDITIONS / PERFORMANCE**
Purpose (detailed)	Protocol flow in case of distinct error
Precondition	FS-Device waiting for the first message
Procedure	See XML file "IO-Link-Safety_spec_device_final_testsuite_testcase_56.xml"
Test parameter	See Table 54 and XML file
Post condition	–
TEST CASE RESULTS	**CHECK / REACTION**
Evaluation	Comparison of expected and received values according to the XML file
Test passed	Comparison OK
Test failed (examples)	Comparison not OK
Report	Printout of the automated SCL protocol tester <pass/fail>

Content of file "IO-Link-Safety_spec_device_final_testsuite_testcase_56.xml":

```xml
<?xml version="1.0" encoding="UTF-8"?>
<Testroot xsi:noNamespaceSchemaLocation="IO-Link-Safety-Test-Procedure_Types_V1.0.xsd"
xmlns:xsi="http://www.w3.org/2001/XMLSchema-instance" version="1.2" name="tc_56" date="20.11.2018: 14:01:13.947">
  <FSDeviceSclTestCaseSteps>
    <Transition SourceState="Init" TargetState="SystemStart_20"/>
    <Transition SourceState="SystemStart_20" TargetState="WaitOnSPDU_21"/>
    <FSDeviceReceive PDout="PD" PortNum="valid" MCount="0" setSD="1" ChFAckReq="0" CRC="valid"/>
    <Transition SourceState="WaitOnSPDU_21" TargetState="CheckSPDU_22"/>
    <Transition SourceState="CheckSPDU_22" TargetState="PrepareResponse_23"/>
    <Transition SourceState="PrepareResponse_23" TargetState="WaitOnSPDU_24"/>
    <FSDeviceSend PDin="PD" PortNum="valid" DCount="7" SDset="1" DCommErr="0" DTimeout="0" CRC="valid"/>
    <FSDeviceReceive PDout="PD" PortNum="valid" MCount="1" setSD="0" ChFAckReq="0" CRC="valid"/>
    <Transition SourceState="WaitOnSPDU_24" TargetState="CheckSPDU_22"/>
    <Transition SourceState="CheckSPDU_22" TargetState="PrepareResponse_23"/>
    <Transition SourceState="PrepareResponse_23" TargetState="WaitOnSPDU_24"/>
    <FSDeviceSend PDin="PD" PortNum="valid" DCount="6" SDset="1" DCommErr="0" DTimeout="0" CRC="valid"/>
    <FSDeviceReceive PDout="PD" PortNum="valid" MCount="2" setSD="0" ChFAckReq="0" CRC="valid"/>
    <Transition SourceState="WaitOnSPDU_24" TargetState="CheckSPDU_22"/>
    <Transition SourceState="CheckSPDU_22" TargetState="PrepareResponse_23"/>
    <Transition SourceState="PrepareResponse_23" TargetState="WaitOnSPDU_24"/>
    <FSDeviceSend PDin="PD" PortNum="valid" DCount="5" SDset="1" DCommErr="0" DTimeout="0" CRC="valid"/>
    <FSDeviceReceive PDout="PD" PortNum="valid" MCount="2" setSD="0" ChFAckReq="0" CRC="valid"/>
    <Transition SourceState="WaitOnSPDU_24" TargetState="WaitOnSPDU_24"/>
  </FSDeviceSclTestCaseSteps>
</Testroot>
```

9.2.57 Test script 57

Table 111 defines the test conditions for this test case. The associated XML file contains steps and message parameters for the state flow check in case of setSD error, MCount = 0, and DCommErr.

Table 111 – FS-Device test script 57

TEST CASE ATTRIBUTES	IDENTIFICATION / REFERENCE
Identification (ID)	SDCI_FSTC_0108
Name	FSTCD_SCLD_FLOW_SETSD1MC0DCE1
Purpose (short)	
Equipment under test (EUT)	FS-Device
Test case version	1.0
Category / type	FS-Device automated SCL protocol test
Specification (clause)	[3] clause 11.3.3, Figure 37 (services); clause 11.5.3, Figure 42 (state chart)
Configuration / setup	See Table 54
TEST CASE	**CONDITIONS / PERFORMANCE**
Purpose (detailed)	Protocol flow in case of distinct error
Precondition	FS-Device waiting for the first message
Procedure	See XML file "IO-Link-Safety_spec_device_final_testsuite_testcase_57.xml"
Test parameter	See Table 54 and XML file
Post condition	–
TEST CASE RESULTS	**CHECK / REACTION**
Evaluation	Comparison of expected and received values according to the XML file
Test passed	Comparison OK
Test failed (examples)	Comparison not OK
Report	Printout of the automated SCL protocol tester <pass/fail>

Content of file "IO-Link-Safety_spec_device_final_testsuite_testcase_57.xml":

```xml
<?xml version="1.0" encoding="UTF-8"?>
<Testroot xsi:noNamespaceSchemaLocation="IO-Link-Safety-Test-Procedure_Types_V1.0.xsd"
xmlns:xsi="http://www.w3.org/2001/XMLSchema-instance" version="1.2" name="tc_57" date="20.11.2018: 14:01:13.947">
  <FSDeviceSclTestCaseSteps>
    <Transition SourceState="Init" TargetState="SystemStart_20"/>
    <Transition SourceState="SystemStart_20" TargetState="WaitOnSPDU_21"/>
    <FSDeviceReceive PDout="PD" PortNum="valid" MCount="0" setSD="1" ChFAckReq="0" CRC="valid"/>
    <Transition SourceState="WaitOnSPDU_21" TargetState="CheckSPDU_22"/>
    <Transition SourceState="CheckSPDU_22" TargetState="PrepareResponse_23"/>
    <Transition SourceState="PrepareResponse_23" TargetState="WaitOnSPDU_24"/>
    <FSDeviceSend PDin="PD" PortNum="valid" DCount="7" SDset="1" DCommErr="0" DTimeout="0" CRC="valid"/>
    <FSDeviceReceive PDout="PD" PortNum="valid" MCount="1" setSD="0" ChFAckReq="0" CRC="valid"/>
    <Transition SourceState="WaitOnSPDU_24" TargetState="CheckSPDU_22"/>
    <Transition SourceState="CheckSPDU_22" TargetState="PrepareResponse_23"/>
    <Transition SourceState="PrepareResponse_23" TargetState="WaitOnSPDU_24"/>
    <FSDeviceSend PDin="PD" PortNum="valid" DCount="6" SDset="1" DCommErr="0" DTimeout="0" CRC="valid"/>
    <FSDeviceReceive PDout="PD" PortNum="valid" MCount="2" setSD="0" ChFAckReq="0" CRC="valid"/>
    <Transition SourceState="WaitOnSPDU_24" TargetState="CheckSPDU_22"/>
    <Transition SourceState="CheckSPDU_22" TargetState="PrepareResponse_23"/>
    <Transition SourceState="PrepareResponse_23" TargetState="WaitOnSPDU_24"/>
    <FSDeviceSend PDin="PD" PortNum="valid" DCount="5" SDset="1" DCommErr="0" DTimeout="0" CRC="valid"/>
    <FSDeviceReceive PDout="PD" PortNum="invalid" MCount="1" setSD="0" ChFAckReq="0" CRC="valid"/>
    <Transition SourceState="WaitOnSPDU_24" TargetState="PrepareResponse_25"/>
    <Transition SourceState="PrepareResponse_25" TargetState="WaitOnSPDU_26"/>
    <FSDeviceSend PDin="PD" PortNum="valid" DCount="6" SDset="1" DCommErr="1" DTimeout="0" CRC="valid"/>
  </FSDeviceSclTestCaseSteps>
</Testroot>
```

9.2.58 Test script 58

Table 112 defines the test conditions for this test case. The associated XML file contains steps and message parameters for the state flow check in case of setSD error, MCount = 0, and DCommErr.

Table 112 – FS-Device test script 58

TEST CASE ATTRIBUTES	IDENTIFICATION / REFERENCE
Identification (ID)	SDCI_FSTC_0109
Name	FSTCD_SCLD_FLOW_SETSD1MC0DCE1
Purpose (short)	
Equipment under test (EUT)	FS-Device
Test case version	1.0
Category / type	FS-Device automated SCL protocol test
Specification (clause)	[3] clause 11.3.3, Figure 37 (services); clause 11.5.3, Figure 42 (state chart)
Configuration / setup	See Table 54

TEST CASE	CONDITIONS / PERFORMANCE
Purpose (detailed)	Protocol flow in case of distinct error
Precondition	FS-Device waiting for the first message
Procedure	See XML file "IO-Link-Safety_spec_device_final_testsuite_testcase_58.xml"
Test parameter	See Table 54 and XML file
Post condition	–

TEST CASE RESULTS	CHECK / REACTION
Evaluation	Comparison of expected and received values according to the XML file
Test passed	Comparison OK
Test failed (examples)	Comparison not OK
Report	Printout of the automated SCL protocol tester <pass/fail>

Content of file "IO-Link-Safety_spec_device_final_testsuite_testcase_58.xml":

```xml
<?xml version="1.0" encoding="UTF-8"?>
<Testroot xsi:noNamespaceSchemaLocation="IO-Link-Safety-Test-Procedure_Types_V1.0.xsd"
xmlns:xsi="http://www.w3.org/2001/XMLSchema-instance" version="1.2" name="tc_58" date="20.11.2018: 14:01:13.947">
  <FSDeviceSclTestCaseSteps>
    <Transition SourceState="Init" TargetState="SystemStart_20"/>
    <Transition SourceState="SystemStart_20" TargetState="WaitOnSPDU_21"/>
    <FSDeviceReceive PDout="PD" PortNum="valid" MCount="0" setSD="1" ChFAckReq="0" CRC="valid"/>
    <Transition SourceState="WaitOnSPDU_21" TargetState="CheckSPDU_22"/>
    <Transition SourceState="CheckSPDU_22" TargetState="PrepareResponse_23"/>
    <Transition SourceState="PrepareResponse_23" TargetState="WaitOnSPDU_24"/>
    <FSDeviceSend PDin="PD" PortNum="valid" DCount="7" SDset="1" DCommErr="0" DTimeout="0" CRC="valid"/>
    <FSDeviceReceive PDout="PD" PortNum="valid" MCount="1" setSD="0" ChFAckReq="0" CRC="valid"/>
    <Transition SourceState="WaitOnSPDU_24" TargetState="CheckSPDU_22"/>
    <Transition SourceState="CheckSPDU_22" TargetState="PrepareResponse_23"/>
    <Transition SourceState="PrepareResponse_23" TargetState="WaitOnSPDU_24"/>
    <FSDeviceSend PDin="PD" PortNum="valid" DCount="6" SDset="1" DCommErr="0" DTimeout="0" CRC="valid"/>
    <FSDeviceReceive PDout="PD" PortNum="valid" MCount="2" setSD="0" ChFAckReq="0" CRC="valid"/>
    <Transition SourceState="WaitOnSPDU_24" TargetState="CheckSPDU_22"/>
    <Transition SourceState="CheckSPDU_22" TargetState="PrepareResponse_23"/>
    <Transition SourceState="PrepareResponse_23" TargetState="WaitOnSPDU_24"/>
    <FSDeviceSend PDin="PD" PortNum="valid" DCount="5" SDset="1" DCommErr="0" DTimeout="0" CRC="valid"/>
    <FSDeviceReceive PDout="PD" PortNum="invalid" MCount="3" setSD="0" ChFAckReq="0" CRC="valid"/>
    <Transition SourceState="WaitOnSPDU_24" TargetState="PrepareResponse_25"/>
    <Transition SourceState="PrepareResponse_25" TargetState="WaitOnSPDU_26"/>
    <FSDeviceSend PDin="PD" PortNum="valid" DCount="4" SDset="1" DCommErr="1" DTimeout="0" CRC="valid"/>
  </FSDeviceSclTestCaseSteps>
</Testroot>
```

9.2.59 Test script 59

Table 113 defines the test conditions for this test case. The associated XML file contains steps and message parameters for the state flow check in case of setSD error, MCount = 0, and DCommErr.

Table 113 – FS-Device test script 59

TEST CASE ATTRIBUTES	IDENTIFICATION / REFERENCE
Identification (ID)	SDCI_FSTC_0110
Name	FSTCD_SCLD_FLOW_SETSD1MC0DCE1
Purpose (short)	
Equipment under test (EUT)	FS-Device
Test case version	1.0
Category / type	FS-Device automated SCL protocol test
Specification (clause)	[3] clause 11.3.3, Figure 37 (services); clause 11.5.3, Figure 42 (state chart)
Configuration / setup	See Table 54
TEST CASE	**CONDITIONS / PERFORMANCE**
Purpose (detailed)	Protocol flow in case of distinct error
Precondition	FS-Device waiting for the first message
Procedure	See XML file "IO-Link-Safety_spec_device_final_testsuite_testcase_59.xml"
Test parameter	See Table 54 and XML file
Post condition	–
TEST CASE RESULTS	**CHECK / REACTION**
Evaluation	Comparison of expected and received values according to the XML file
Test passed	Comparison OK
Test failed (examples)	Comparison not OK
Report	Printout of the automated SCL protocol tester <pass/fail>

Content of file "IO-Link-Safety_spec_device_final_testsuite_testcase_59.xml":

```xml
<?xml version="1.0" encoding="UTF-8"?>
<Testroot xsi:noNamespaceSchemaLocation="IO-Link-Safety-Test-Procedure_Types_V1.0.xsd"
xmlns:xsi="http://www.w3.org/2001/XMLSchema-instance" version="1.2" name="tc_59" date="20.11.2018: 14:01:13.947">
  <FSDeviceSclTestCaseSteps>
    <Transition SourceState="Init" TargetState="SystemStart_20"/>
    <Transition SourceState="SystemStart_20" TargetState="WaitOnSPDU_21"/>
    <FSDeviceReceive PDout="PD" PortNum="valid" MCount="0" setSD="1" ChFAckReq="0" CRC="valid"/>
    <Transition SourceState="WaitOnSPDU_21" TargetState="CheckSPDU_22"/>
    <Transition SourceState="CheckSPDU_22" TargetState="PrepareResponse_23"/>
    <Transition SourceState="PrepareResponse_23" TargetState="WaitOnSPDU_24"/>
    <FSDeviceSend PDin="PD" PortNum="valid" DCount="7" SDset="1" DCommErr="0" DTimeout="0" CRC="valid"/>
    <FSDeviceReceive PDout="PD" PortNum="valid" MCount="1" setSD="0" ChFAckReq="0" CRC="valid"/>
    <Transition SourceState="WaitOnSPDU_24" TargetState="CheckSPDU_22"/>
    <Transition SourceState="CheckSPDU_22" TargetState="PrepareResponse_23"/>
    <Transition SourceState="PrepareResponse_23" TargetState="WaitOnSPDU_24"/>
    <FSDeviceSend PDin="PD" PortNum="valid" DCount="6" SDset="1" DCommErr="0" DTimeout="0" CRC="valid"/>
    <FSDeviceReceive PDout="PD" PortNum="valid" MCount="2" setSD="1" ChFAckReq="0" CRC="valid"/>
    <Transition SourceState="WaitOnSPDU_24" TargetState="CheckSPDU_22"/>
    <Transition SourceState="CheckSPDU_22" TargetState="PrepareResponse_23"/>
    <Transition SourceState="PrepareResponse_23" TargetState="WaitOnSPDU_24"/>
    <FSDeviceSend PDin="PD" PortNum="valid" DCount="5" SDset="1" DCommErr="0" DTimeout="0" CRC="valid"/>
    <FSDeviceReceive PDout="PD" PortNum="valid" MCount="1" setSD="0" ChFAckReq="0" CRC="invalid"/>
    <Transition SourceState="WaitOnSPDU_24" TargetState="PrepareResponse_25"/>
    <Transition SourceState="PrepareResponse_25" TargetState="WaitOnSPDU_26"/>
    <FSDeviceSend PDin="PD" PortNum="valid" DCount="6" SDset="1" DCommErr="1" DTimeout="0" CRC="valid"/>
  </FSDeviceSclTestCaseSteps>
</Testroot>
```

9.2.60 Test script 60

Table 114 defines the test conditions for this test case. The associated XML file contains steps and message parameters for the state flow check in case of setSD error, MCount = 0, and DCommErr.

Table 114 – FS-Device test script 60

TEST CASE ATTRIBUTES	IDENTIFICATION / REFERENCE
Identification (ID)	SDCI_FSTC_0111
Name	FSTCD_SCLD_FLOW_SETSD1MC0DCE1
Purpose (short)	
Equipment under test (EUT)	FS-Device
Test case version	1.0
Category / type	FS-Device automated SCL protocol test
Specification (clause)	[3] clause 11.3.3, Figure 37 (services); clause 11.5.3, Figure 42 (state chart)
Configuration / setup	See Table 54
TEST CASE	**CONDITIONS / PERFORMANCE**
Purpose (detailed)	Protocol flow in case of distinct error
Precondition	FS-Device waiting for the first message
Procedure	See XML file "IO-Link-Safety_spec_device_final_testsuite_testcase_60.xml"
Test parameter	See Table 54 and XML file
Post condition	–
TEST CASE RESULTS	**CHECK / REACTION**
Evaluation	Comparison of expected and received values according to the XML file
Test passed	Comparison OK
Test failed (examples)	Comparison not OK
Report	Printout of the automated SCL protocol tester <pass/fail>

Content of file "IO-Link-Safety_spec_device_final_testsuite_testcase_60.xml":

```xml
<?xml version="1.0" encoding="UTF-8"?>
<Testroot xsi:noNamespaceSchemaLocation="IO-Link-Safety-Test-Procedure_Types_V1.0.xsd"
xmlns:xsi="http://www.w3.org/2001/XMLSchema-instance" version="1.2" name="tc_60" date="20.11.2018: 14:01:13.948">
  <FSDeviceSclTestCaseSteps>
    <Transition SourceState="Init" TargetState="SystemStart_20"/>
    <Transition SourceState="SystemStart_20" TargetState="WaitOnSPDU_21"/>
    <FSDeviceReceive PDout="PD" PortNum="valid" MCount="0" setSD="1" ChFAckReq="0" CRC="valid"/>
    <Transition SourceState="WaitOnSPDU_21" TargetState="CheckSPDU_22"/>
    <Transition SourceState="CheckSPDU_22" TargetState="PrepareResponse_23"/>
    <Transition SourceState="PrepareResponse_23" TargetState="WaitOnSPDU_24"/>
    <FSDeviceSend PDin="PD" PortNum="valid" DCount="7" SDset="1" DCommErr="0" DTimeout="0" CRC="valid"/>
    <FSDeviceReceive PDout="PD" PortNum="valid" MCount="1" setSD="0" ChFAckReq="0" CRC="valid"/>
    <Transition SourceState="WaitOnSPDU_24" TargetState="CheckSPDU_22"/>
    <Transition SourceState="CheckSPDU_22" TargetState="PrepareResponse_23"/>
    <Transition SourceState="PrepareResponse_23" TargetState="WaitOnSPDU_24"/>
    <FSDeviceSend PDin="PD" PortNum="valid" DCount="6" SDset="1" DCommErr="0" DTimeout="0" CRC="valid"/>
    <FSDeviceReceive PDout="PD" PortNum="valid" MCount="2" setSD="1" ChFAckReq="0" CRC="valid"/>
    <Transition SourceState="WaitOnSPDU_24" TargetState="CheckSPDU_22"/>
    <Transition SourceState="CheckSPDU_22" TargetState="PrepareResponse_23"/>
    <Transition SourceState="PrepareResponse_23" TargetState="WaitOnSPDU_24"/>
    <FSDeviceSend PDin="PD" PortNum="valid" DCount="5" SDset="1" DCommErr="0" DTimeout="0" CRC="valid"/>
    <FSDeviceReceive PDout="PD" PortNum="valid" MCount="3" setSD="0" ChFAckReq="0" CRC="invalid"/>
    <Transition SourceState="WaitOnSPDU_24" TargetState="PrepareResponse_25"/>
    <Transition SourceState="PrepareResponse_25" TargetState="WaitOnSPDU_26"/>
    <FSDeviceSend PDin="PD" PortNum="valid" DCount="4" SDset="1" DCommErr="1" DTimeout="0" CRC="valid"/>
  </FSDeviceSclTestCaseSteps>
</Testroot>
```

9.2.61 Test script 61

Table 115 defines the test conditions for this test case. The associated XML file contains steps and message parameters for the state flow check in case of setSD error and MCount = 0.

Table 115 – FS-Device test script 61

TEST CASE ATTRIBUTES	IDENTIFICATION / REFERENCE
Identification (ID)	SDCI_FSTC_0112
Name	FSTCD_SCLD_FLOW_SETSD1MC0
Purpose (short)	
Equipment under test (EUT)	FS-Device
Test case version	1.0
Category / type	FS-Device automated SCL protocol test
Specification (clause)	[3] clause 11.3.3, Figure 37 (services); clause 11.5.3, Figure 42 (state chart)
Configuration / setup	See Table 54
TEST CASE	**CONDITIONS / PERFORMANCE**
Purpose (detailed)	Protocol flow in case of distinct error
Precondition	FS-Device waiting for the first message
Procedure	See XML file "IO-Link-Safety_spec_device_final_testsuite_testcase_61.xml"
Test parameter	See Table 54 and XML file
Post condition	–
TEST CASE RESULTS	**CHECK / REACTION**
Evaluation	Comparison of expected and received values according to the XML file
Test passed	Comparison OK
Test failed (examples)	Comparison not OK
Report	Printout of the automated SCL protocol tester <pass/fail>

Content of file "IO-Link-Safety_spec_device_final_testsuite_testcase_61.xml":

```xml
<?xml version="1.0" encoding="UTF-8"?>
<Testroot xsi:noNamespaceSchemaLocation="IO-Link-Safety-Test-Procedure_Types_V1.0.xsd"
xmlns:xsi="http://www.w3.org/2001/XMLSchema-instance" version="1.2" name="tc_61" date="20.11.2018: 14:01:13.948">
  <FSDeviceSclTestCaseSteps>
    <Transition SourceState="Init" TargetState="SystemStart_20"/>
    <Transition SourceState="SystemStart_20" TargetState="WaitOnSPDU_21"/>
    <FSDeviceReceive PDout="PD" PortNum="valid" MCount="0" setSD="1" ChFAckReq="0" CRC="valid"/>
    <Transition SourceState="WaitOnSPDU_21" TargetState="CheckSPDU_22"/>
    <Transition SourceState="CheckSPDU_22" TargetState="PrepareResponse_23"/>
    <Transition SourceState="PrepareResponse_23" TargetState="WaitOnSPDU_24"/>
    <FSDeviceSend PDin="PD" PortNum="valid" DCount="7" SDset="1" DCommErr="0" DTimeout="0" CRC="valid"/>
    <FSDeviceReceive PDout="PD" PortNum="valid" MCount="1" setSD="0" ChFAckReq="0" CRC="valid"/>
    <Transition SourceState="WaitOnSPDU_24" TargetState="CheckSPDU_22"/>
    <Transition SourceState="CheckSPDU_22" TargetState="PrepareResponse_23"/>
    <Transition SourceState="PrepareResponse_23" TargetState="WaitOnSPDU_24"/>
    <FSDeviceSend PDin="PD" PortNum="valid" DCount="6" SDset="1" DCommErr="0" DTimeout="0" CRC="valid"/>
    <FSDeviceReceive PDout="PD" PortNum="valid" MCount="0" setSD="0" ChFAckReq="0" CRC="valid"/>
    <Transition SourceState="WaitOnSPDU_24" TargetState="CheckSPDU_22"/>
    <Transition SourceState="CheckSPDU_22" TargetState="PrepareResponse_23"/>
    <Transition SourceState="PrepareResponse_23" TargetState="WaitOnSPDU_24"/>
    <FSDeviceSend PDin="PD" PortNum="valid" DCount="7" SDset="1" DCommErr="0" DTimeout="0" CRC="valid"/>
    <FSDeviceReceive PDout="PD" PortNum="valid" MCount="0" setSD="0" ChFAckReq="0" CRC="valid"/>
    <Transition SourceState="WaitOnSPDU_24" TargetState="WaitOnSPDU_24"/>
  </FSDeviceSclTestCaseSteps>
</Testroot>
```

9.2.62 Test script 62

Table 115 defines the test conditions for this test case. The associated XML file contains steps and message parameters for the state flow check in case of setSD error, MCount = 0, and DCommErr.

Table 116 – FS-Device test script 62

TEST CASE ATTRIBUTES	IDENTIFICATION / REFERENCE
Identification (ID)	SDCI_FSTC_0113
Name	FSTCD_SCLD_FLOW_SETSD1MC0DCE1
Purpose (short)	
Equipment under test (EUT)	FS-Device
Test case version	1.0
Category / type	FS-Device automated SCL protocol test
Specification (clause)	[3] clause 11.3.3, Figure 37 (services); clause 11.5.3, Figure 42 (state chart)
Configuration / setup	See Table 54
TEST CASE	**CONDITIONS / PERFORMANCE**
Purpose (detailed)	Protocol flow in case of distinct error
Precondition	FS-Device waiting for the first message
Procedure	See XML file "IO-Link-Safety_spec_device_final_testsuite_testcase_62.xml"
Test parameter	See Table 54 and XML file
Post condition	–
TEST CASE RESULTS	**CHECK / REACTION**
Evaluation	Comparison of expected and received values according to the XML file
Test passed	Comparison OK
Test failed (examples)	Comparison not OK
Report	Printout of the automated SCL protocol tester <pass/fail>

Content of file "IO-Link-Safety_spec_device_final_testsuite_testcase_62.xml":

```xml
<?xml version="1.0" encoding="UTF-8"?>
<Testroot xsi:noNamespaceSchemaLocation="IO-Link-Safety-Test-Procedure_Types_V1.0.xsd"
xmlns:xsi="http://www.w3.org/2001/XMLSchema-instance" version="1.2" name="tc_62" date="20.11.2018: 14:01:13.948">
  <FSDeviceSclTestCaseSteps>
    <Transition SourceState="Init" TargetState="SystemStart_20"/>
    <Transition SourceState="SystemStart_20" TargetState="WaitOnSPDU_21"/>
    <FSDeviceReceive PDout="PD" PortNum="valid" MCount="0" setSD="1" ChFAckReq="0" CRC="valid"/>
    <Transition SourceState="WaitOnSPDU_21" TargetState="CheckSPDU_22"/>
    <Transition SourceState="CheckSPDU_22" TargetState="PrepareResponse_23"/>
    <Transition SourceState="PrepareResponse_23" TargetState="WaitOnSPDU_24"/>
    <FSDeviceSend PDin="PD" PortNum="valid" DCount="7" SDset="1" DCommErr="0" DTimeout="0" CRC="valid"/>
    <FSDeviceReceive PDout="PD" PortNum="valid" MCount="1" setSD="0" ChFAckReq="0" CRC="valid"/>
    <Transition SourceState="WaitOnSPDU_24" TargetState="CheckSPDU_22"/>
    <Transition SourceState="CheckSPDU_22" TargetState="PrepareResponse_23"/>
    <Transition SourceState="PrepareResponse_23" TargetState="WaitOnSPDU_24"/>
    <FSDeviceSend PDin="PD" PortNum="valid" DCount="6" SDset="1" DCommErr="0" DTimeout="0" CRC="valid"/>
    <FSDeviceReceive PDout="PD" PortNum="valid" MCount="0" setSD="0" ChFAckReq="0" CRC="valid"/>
    <Transition SourceState="WaitOnSPDU_24" TargetState="CheckSPDU_22"/>
    <Transition SourceState="CheckSPDU_22" TargetState="PrepareResponse_23"/>
    <Transition SourceState="PrepareResponse_23" TargetState="WaitOnSPDU_24"/>
    <FSDeviceSend PDin="PD" PortNum="valid" DCount="7" SDset="1" DCommErr="0" DTimeout="0" CRC="valid"/>
    <FSDeviceReceive PDout="PD" PortNum="invalid" MCount="2" setSD="0" ChFAckReq="0" CRC="valid"/>
    <Transition SourceState="WaitOnSPDU_24" TargetState="PrepareResponse_25"/>
    <Transition SourceState="PrepareResponse_25" TargetState="WaitOnSPDU_26"/>
    <FSDeviceSend PDin="PD" PortNum="valid" DCount="5" SDset="1" DCommErr="1" DTimeout="0" CRC="valid"/>
  </FSDeviceSclTestCaseSteps>
</Testroot>
```

9.2.63 Test script 63

Table 117 defines the test conditions for this test case. The associated XML file contains steps and message parameters for the state flow check in case of setSD error, MCount = 0, and DCommErr.

Table 117 – FS-Device test script 63

TEST CASE ATTRIBUTES	IDENTIFICATION / REFERENCE
Identification (ID)	SDCI_FSTC_0114
Name	FSTCD_SCLD_FLOW_SETSD1MC0DCE1
Purpose (short)	
Equipment under test (EUT)	FS-Device
Test case version	1.0
Category / type	FS-Device automated SCL protocol test
Specification (clause)	[3] clause 11.3.3, Figure 37 (services); clause 11.5.3, Figure 42 (state chart)
Configuration / setup	See Table 54
TEST CASE	**CONDITIONS / PERFORMANCE**
Purpose (detailed)	Protocol flow in case of distinct error
Precondition	FS-Device waiting for the first message
Procedure	See XML file "IO-Link-Safety_spec_device_final_testsuite_testcase_63.xml"
Test parameter	See Table 54 and XML file
Post condition	–
TEST CASE RESULTS	**CHECK / REACTION**
Evaluation	Comparison of expected and received values according to the XML file
Test passed	Comparison OK
Test failed (examples)	Comparison not OK
Report	Printout of the automated SCL protocol tester <pass/fail>

Content of file "IO-Link-Safety_spec_device_final_testsuite_testcase_63.xml":

```xml
<?xml version="1.0" encoding="UTF-8"?>
<Testroot xsi:noNamespaceSchemaLocation="IO-Link-Safety-Test-Procedure_Types_V1.0.xsd"
xmlns:xsi="http://www.w3.org/2001/XMLSchema-instance" version="1.2" name="tc_63" date="20.11.2018: 14:01:13.948">
  <FSDeviceSclTestCaseSteps>
    <Transition SourceState="Init" TargetState="SystemStart_20"/>
    <Transition SourceState="SystemStart_20" TargetState="WaitOnSPDU_21"/>
    <FSDeviceReceive PDout="PD" PortNum="valid" MCount="0" setSD="1" ChFAckReq="0" CRC="valid"/>
    <Transition SourceState="WaitOnSPDU_21" TargetState="CheckSPDU_22"/>
    <Transition SourceState="CheckSPDU_22" TargetState="PrepareResponse_23"/>
    <Transition SourceState="PrepareResponse_23" TargetState="WaitOnSPDU_24"/>
    <FSDeviceSend PDin="PD" PortNum="valid" DCount="7" SDset="1" DCommErr="0" DTimeout="0" CRC="valid"/>
    <FSDeviceReceive PDout="PD" PortNum="valid" MCount="1" setSD="0" ChFAckReq="0" CRC="valid"/>
    <Transition SourceState="WaitOnSPDU_24" TargetState="CheckSPDU_22"/>
    <Transition SourceState="CheckSPDU_22" TargetState="PrepareResponse_23"/>
    <Transition SourceState="PrepareResponse_23" TargetState="WaitOnSPDU_24"/>
    <FSDeviceSend PDin="PD" PortNum="valid" DCount="6" SDset="1" DCommErr="0" DTimeout="0" CRC="valid"/>
    <FSDeviceReceive PDout="PD" PortNum="valid" MCount="2" setSD="0" ChFAckReq="0" CRC="valid"/>
    <Transition SourceState="WaitOnSPDU_24" TargetState="CheckSPDU_22"/>
    <Transition SourceState="CheckSPDU_22" TargetState="PrepareResponse_23"/>
    <Transition SourceState="PrepareResponse_23" TargetState="WaitOnSPDU_24"/>
    <FSDeviceSend PDin="PD" PortNum="valid" DCount="5" SDset="1" DCommErr="0" DTimeout="0" CRC="valid"/>
    <FSDeviceReceive PDout="PD" PortNum="valid" MCount="4" setSD="0" ChFAckReq="0" CRC="valid"/>
    <Transition SourceState="WaitOnSPDU_24" TargetState="CheckSPDU_22"/>
    <Transition SourceState="CheckSPDU_22" TargetState="PrepareResponse_25"/>
    <Transition SourceState="PrepareResponse_25" TargetState="WaitOnSPDU_26"/>
    <FSDeviceSend PDin="PD" PortNum="valid" DCount="3" SDset="1" DCommErr="1" DTimeout="0" CRC="valid"/>
  </FSDeviceSclTestCaseSteps>
</Testroot>
```

9.2.64 Test script 64

Table 118 defines the test conditions for this test case. The associated XML file contains steps and message parameters for the state flow check in case of setSD error, MCount = 0, and DCommErr.

Table 118 – FS-Device test script 64

TEST CASE ATTRIBUTES	IDENTIFICATION / REFERENCE
Identification (ID)	SDCI_FSTC_0115
Name	FSTCD_SCLD_FLOW_SETSD1MC0DCE1
Purpose (short)	
Equipment under test (EUT)	FS-Device
Test case version	1.0
Category / type	FS-Device automated SCL protocol test
Specification (clause)	[3] clause 11.3.3, Figure 37 (services); clause 11.5.3, Figure 42 (state chart)
Configuration / setup	See Table 54
TEST CASE	**CONDITIONS / PERFORMANCE**
Purpose (detailed)	Protocol flow in case of distinct error
Precondition	FS-Device waiting for the first message
Procedure	See XML file "IO-Link-Safety_spec_device_final_testsuite_testcase_64.xml"
Test parameter	See Table 54 and XML file
Post condition	–
TEST CASE RESULTS	**CHECK / REACTION**
Evaluation	Comparison of expected and received values according to the XML file
Test passed	Comparison OK
Test failed (examples)	Comparison not OK
Report	Printout of the automated SCL protocol tester <pass/fail>

Content of file "IO-Link-Safety_spec_device_final_testsuite_testcase_64.xml":

```xml
<?xml version="1.0" encoding="UTF-8"?>
<Testroot xsi:noNamespaceSchemaLocation="IO-Link-Safety-Test-Procedure_Types_V1.0.xsd"
xmlns:xsi="http://www.w3.org/2001/XMLSchema-instance" version="1.2" name="tc_64" date="20.11.2018: 14:01:13.948">
  <FSDeviceSclTestCaseSteps>
    <Transition SourceState="Init" TargetState="SystemStart_20"/>
    <Transition SourceState="SystemStart_20" TargetState="WaitOnSPDU_21"/>
    <FSDeviceReceive PDout="PD" PortNum="valid" MCount="0" setSD="1" ChFAckReq="0" CRC="valid"/>
    <Transition SourceState="WaitOnSPDU_21" TargetState="CheckSPDU_22"/>
    <Transition SourceState="CheckSPDU_22" TargetState="PrepareResponse_23"/>
    <Transition SourceState="PrepareResponse_23" TargetState="WaitOnSPDU_24"/>
    <FSDeviceSend PDin="PD" PortNum="valid" DCount="7" SDset="1" DCommErr="0" DTimeout="0" CRC="valid"/>
    <FSDeviceReceive PDout="PD" PortNum="valid" MCount="1" setSD="0" ChFAckReq="0" CRC="valid"/>
    <Transition SourceState="WaitOnSPDU_24" TargetState="CheckSPDU_22"/>
    <Transition SourceState="CheckSPDU_22" TargetState="PrepareResponse_23"/>
    <Transition SourceState="PrepareResponse_23" TargetState="WaitOnSPDU_24"/>
    <FSDeviceSend PDin="PD" PortNum="valid" DCount="6" SDset="1" DCommErr="0" DTimeout="0" CRC="valid"/>
    <FSDeviceReceive PDout="PD" PortNum="valid" MCount="0" setSD="0" ChFAckReq="0" CRC="valid"/>
    <Transition SourceState="WaitOnSPDU_24" TargetState="CheckSPDU_22"/>
    <Transition SourceState="CheckSPDU_22" TargetState="PrepareResponse_23"/>
    <Transition SourceState="PrepareResponse_23" TargetState="WaitOnSPDU_24"/>
    <FSDeviceSend PDin="PD" PortNum="valid" DCount="7" SDset="1" DCommErr="0" DTimeout="0" CRC="valid"/>
    <FSDeviceReceive PDout="PD" PortNum="valid" MCount="2" setSD="0" ChFAckReq="0" CRC="valid"/>
    <Transition SourceState="WaitOnSPDU_24" TargetState="CheckSPDU_22"/>
    <Transition SourceState="CheckSPDU_22" TargetState="PrepareResponse_25"/>
    <Transition SourceState="PrepareResponse_25" TargetState="WaitOnSPDU_26"/>
    <FSDeviceSend PDin="PD" PortNum="valid" DCount="5" SDset="1" DCommErr="1" DTimeout="0" CRC="valid"/>
  </FSDeviceSclTestCaseSteps>
</Testroot>
```

9.2.65 Test script 65

Table 119 defines the test conditions for this test case. The associated XML file contains steps and message parameters for the state flow check in case of setSD error and MCount = 0.

Table 119 – FS-Device test script 65

TEST CASE ATTRIBUTES	IDENTIFICATION / REFERENCE
Identification (ID)	SDCI_FSTC_0116
Name	FSTCD_SCLD_FLOW_SETSD1MC0
Purpose (short)	
Equipment under test (EUT)	FS-Device
Test case version	1.0
Category / type	FS-Device automated SCL protocol test
Specification (clause)	[3] clause 11.3.3, Figure 37 (services); clause 11.5.3, Figure 42 (state chart)
Configuration / setup	See Table 54
TEST CASE	**CONDITIONS / PERFORMANCE**
Purpose (detailed)	Protocol flow in case of distinct error
Precondition	FS-Device waiting for the first message
Procedure	See XML file "IO-Link-Safety_spec_device_final_testsuite_testcase_65.xml"
Test parameter	See Table 54 and XML file
Post condition	–
TEST CASE RESULTS	**CHECK / REACTION**
Evaluation	Comparison of expected and received values according to the XML file
Test passed	Comparison OK
Test failed (examples)	Comparison not OK
Report	Printout of the automated SCL protocol tester <pass/fail>

Content of file "IO-Link-Safety_spec_device_final_testsuite_testcase_65.xml":

```xml
<?xml version="1.0" encoding="UTF-8"?>
<Testroot xsi:noNamespaceSchemaLocation="IO-Link-Safety-Test-Procedure_Types_V1.0.xsd"
xmlns:xsi="http://www.w3.org/2001/XMLSchema-instance" version="1.2" name="tc_65" date="20.11.2018: 14:01:13.948">
  <FSDeviceSclTestCaseSteps>
    <Transition SourceState="Init" TargetState="SystemStart_20"/>
    <Transition SourceState="SystemStart_20" TargetState="WaitOnSPDU_21"/>
    <FSDeviceReceive PDout="PD" PortNum="valid" MCount="0" setSD="1" ChFAckReq="0" CRC="valid"/>
    <Transition SourceState="WaitOnSPDU_21" TargetState="CheckSPDU_22"/>
    <Transition SourceState="CheckSPDU_22" TargetState="PrepareResponse_23"/>
    <Transition SourceState="PrepareResponse_23" TargetState="WaitOnSPDU_24"/>
    <FSDeviceSend PDin="PD" PortNum="valid" DCount="7" SDset="1" DCommErr="0" DTimeout="0" CRC="valid"/>
    <FSDeviceReceive PDout="PD" PortNum="valid" MCount="1" setSD="0" ChFAckReq="0" CRC="valid"/>
    <Transition SourceState="WaitOnSPDU_24" TargetState="CheckSPDU_22"/>
    <Transition SourceState="CheckSPDU_22" TargetState="PrepareResponse_23"/>
    <Transition SourceState="PrepareResponse_23" TargetState="WaitOnSPDU_24"/>
    <FSDeviceSend PDin="PD" PortNum="valid" DCount="6" SDset="1" DCommErr="0" DTimeout="0" CRC="valid"/>
    <FSDeviceReceive PDout="PD" PortNum="valid" MCount="2" setSD="0" ChFAckReq="0" CRC="valid"/>
    <Transition SourceState="WaitOnSPDU_24" TargetState="CheckSPDU_22"/>
    <Transition SourceState="CheckSPDU_22" TargetState="PrepareResponse_23"/>
    <Transition SourceState="PrepareResponse_23" TargetState="WaitOnSPDU_24"/>
    <FSDeviceSend PDin="PD" PortNum="valid" DCount="5" SDset="1" DCommErr="0" DTimeout="0" CRC="valid"/>
    <FSDeviceReceive PDout="PD" PortNum="valid" MCount="3" setSD="0" ChFAckReq="0" CRC="valid"/>
    <Transition SourceState="WaitOnSPDU_24" TargetState="CheckSPDU_22"/>
    <Transition SourceState="CheckSPDU_22" TargetState="PrepareResponse_23"/>
    <Transition SourceState="PrepareResponse_23" TargetState="WaitOnSPDU_24"/>
    <FSDeviceSend PDin="PD" PortNum="valid" DCount="4" SDset="0" DCommErr="0" DTimeout="0" CRC="valid"/>
    <FSDeviceReceive PDout="PD" PortNum="valid" MCount="3" setSD="0" ChFAckReq="0" CRC="valid"/>
    <Transition SourceState="WaitOnSPDU_24" TargetState="WaitOnSPDU_24"/>
  </FSDeviceSclTestCaseSteps>
</Testroot>
```

9.2.66 Test script 66

Table 120 defines the test conditions for this test case. The associated XML file contains steps and message parameters for the state flow check in case of setSD error and MCount = 0.

Table 120 – FS-Device test script 66

TEST CASE ATTRIBUTES	IDENTIFICATION / REFERENCE
Identification (ID)	SDCI_FSTC_0117
Name	FSTCD_SCLD_FLOW_SETSD1MC0
Purpose (short)	
Equipment under test (EUT)	FS-Device
Test case version	1.0
Category / type	FS-Device automated SCL protocol test
Specification (clause)	[3] clause 11.3.3, Figure 37 (services); clause 11.5.3, Figure 42 (state chart)
Configuration / setup	See Table 54
TEST CASE	**CONDITIONS / PERFORMANCE**
Purpose (detailed)	Protocol flow in case of distinct error
Precondition	FS-Device waiting for the first message
Procedure	See XML file "IO-Link-Safety_spec_device_final_testsuite_testcase_66.xml"
Test parameter	See Table 54 and XML file
Post condition	–
TEST CASE RESULTS	**CHECK / REACTION**
Evaluation	Comparison of expected and received values according to the XML file
Test passed	Comparison OK
Test failed (examples)	Comparison not OK
Report	Printout of the automated SCL protocol tester <pass/fail>

Content of file "IO-Link-Safety_spec_device_final_testsuite_testcase_66.xml":

```xml
<?xml version="1.0" encoding="UTF-8"?>
<Testroot xsi:noNamespaceSchemaLocation="IO-Link-Safety-Test-Procedure_Types_V1.0.xsd"
xmlns:xsi="http://www.w3.org/2001/XMLSchema-instance" version="1.2" name="tc_66" date="20.11.2018: 14:01:13.948">
  <FSDeviceSclTestCaseSteps>
    <Transition SourceState="Init" TargetState="SystemStart_20"/>
    <Transition SourceState="SystemStart_20" TargetState="WaitOnSPDU_21"/>
    <FSDeviceReceive PDout="PD" PortNum="valid" MCount="0" setSD="1" ChFAckReq="0" CRC="valid"/>
    <Transition SourceState="WaitOnSPDU_21" TargetState="CheckSPDU_22"/>
    <Transition SourceState="CheckSPDU_22" TargetState="PrepareResponse_23"/>
    <Transition SourceState="PrepareResponse_23" TargetState="WaitOnSPDU_24"/>
    <FSDeviceSend PDin="PD" PortNum="valid" DCount="7" SDset="1" DCommErr="0" DTimeout="0" CRC="valid"/>
    <FSDeviceReceive PDout="PD" PortNum="valid" MCount="1" setSD="0" ChFAckReq="0" CRC="valid"/>
    <Transition SourceState="WaitOnSPDU_24" TargetState="CheckSPDU_22"/>
    <Transition SourceState="CheckSPDU_22" TargetState="PrepareResponse_23"/>
    <Transition SourceState="PrepareResponse_23" TargetState="WaitOnSPDU_24"/>
    <FSDeviceSend PDin="PD" PortNum="valid" DCount="6" SDset="1" DCommErr="0" DTimeout="0" CRC="valid"/>
    <FSDeviceReceive PDout="PD" PortNum="valid" MCount="2" setSD="0" ChFAckReq="0" CRC="valid"/>
    <Transition SourceState="WaitOnSPDU_24" TargetState="CheckSPDU_22"/>
    <Transition SourceState="CheckSPDU_22" TargetState="PrepareResponse_23"/>
    <Transition SourceState="PrepareResponse_23" TargetState="WaitOnSPDU_24"/>
    <FSDeviceSend PDin="PD" PortNum="valid" DCount="5" SDset="1" DCommErr="0" DTimeout="0" CRC="valid"/>
    <FSDeviceReceive PDout="PD" PortNum="valid" MCount="3" setSD="0" ChFAckReq="0" CRC="valid"/>
    <Transition SourceState="WaitOnSPDU_24" TargetState="CheckSPDU_22"/>
    <Transition SourceState="CheckSPDU_22" TargetState="PrepareResponse_23"/>
    <Transition SourceState="PrepareResponse_23" TargetState="WaitOnSPDU_24"/>
    <FSDeviceSend PDin="PD" PortNum="valid" DCount="4" SDset="0" DCommErr="0" DTimeout="0" CRC="valid"/>
    <FSDeviceReceive PDout="PD" PortNum="invalid" MCount="1" setSD="0" ChFAckReq="0" CRC="valid"/>
    <Transition SourceState="WaitOnSPDU_24" TargetState="PrepareResponse_25"/>
    <Transition SourceState="PrepareResponse_25" TargetState="WaitOnSPDU_26"/>
```

```
    <FSDeviceSend PDin="PD" PortNum="valid" DCount="6" SDset="1" DCommErr="1" DTimeout="0" CRC="valid"/>
  </FSDeviceSclTestCaseSteps>
</Testroot>
```

9.2.67 Test script 67

Table 121 defines the test conditions for this test case. The associated XML file contains steps and message parameters for the state flow check in case of setSD error, MCount = 0, and DCommErr.

Table 121 – FS-Device test script 67

TEST CASE ATTRIBUTES	IDENTIFICATION / REFERENCE
Identification (ID)	SDCI_FSTC_0118
Name	FSTCD_SCLD_FLOW_SETSD1MC0DCE1
Purpose (short)	
Equipment under test (EUT)	FS-Device
Test case version	1.0
Category / type	FS-Device automated SCL protocol test
Specification (clause)	[3] clause 11.3.3, Figure 37 (services); clause 11.5.3, Figure 42 (state chart)
Configuration / setup	See Table 54
TEST CASE	**CONDITIONS / PERFORMANCE**
Purpose (detailed)	Protocol flow in case of distinct error
Precondition	FS-Device waiting for the first message
Procedure	See XML file "IO-Link-Safety_spec_device_final_testsuite_testcase_67.xml"
Test parameter	See Table 54 and XML file
Post condition	–
TEST CASE RESULTS	**CHECK / REACTION**
Evaluation	Comparison of expected and received values according to the XML file
Test passed	Comparison OK
Test failed (examples)	Comparison not OK
Report	Printout of the automated SCL protocol tester <pass/fail>

Content of file "IO-Link-Safety_spec_device_final_testsuite_testcase_67.xml":

```xml
<?xml version="1.0" encoding="UTF-8"?>
<Testroot xsi:noNamespaceSchemaLocation="IO-Link-Safety-Test-Procedure_Types_V1.0.xsd"
xmlns:xsi="http://www.w3.org/2001/XMLSchema-instance" version="1.2" name="tc_67" date="20.11.2018: 14:01:13.948">
  <FSDeviceSclTestCaseSteps>
    <Transition SourceState="Init" TargetState="SystemStart_20"/>
    <Transition SourceState="SystemStart_20" TargetState="WaitOnSPDU_21"/>
    <FSDeviceReceive PDout="PD" PortNum="valid" MCount="0" setSD="1" ChFAckReq="0" CRC="valid"/>
    <Transition SourceState="WaitOnSPDU_21" TargetState="CheckSPDU_22"/>
    <Transition SourceState="CheckSPDU_22" TargetState="PrepareResponse_23"/>
    <Transition SourceState="PrepareResponse_23" TargetState="WaitOnSPDU_24"/>
    <FSDeviceSend PDin="PD" PortNum="valid" DCount="7" SDset="1" DCommErr="0" DTimeout="0" CRC="valid"/>
    <FSDeviceReceive PDout="PD" PortNum="valid" MCount="1" setSD="0" ChFAckReq="0" CRC="valid"/>
    <Transition SourceState="WaitOnSPDU_24" TargetState="CheckSPDU_22"/>
    <Transition SourceState="CheckSPDU_22" TargetState="PrepareResponse_23"/>
    <Transition SourceState="PrepareResponse_23" TargetState="WaitOnSPDU_24"/>
    <FSDeviceSend PDin="PD" PortNum="valid" DCount="6" SDset="1" DCommErr="0" DTimeout="0" CRC="valid"/>
    <FSDeviceReceive PDout="PD" PortNum="valid" MCount="2" setSD="0" ChFAckReq="0" CRC="valid"/>
    <Transition SourceState="WaitOnSPDU_24" TargetState="CheckSPDU_22"/>
    <Transition SourceState="CheckSPDU_22" TargetState="PrepareResponse_23"/>
    <Transition SourceState="PrepareResponse_23" TargetState="WaitOnSPDU_24"/>
    <FSDeviceSend PDin="PD" PortNum="valid" DCount="5" SDset="1" DCommErr="0" DTimeout="0" CRC="valid"/>
    <FSDeviceReceive PDout="PD" PortNum="valid" MCount="3" setSD="0" ChFAckReq="0" CRC="valid"/>
    <Transition SourceState="WaitOnSPDU_24" TargetState="CheckSPDU_22"/>
    <Transition SourceState="CheckSPDU_22" TargetState="PrepareResponse_23"/>
    <Transition SourceState="PrepareResponse_23" TargetState="WaitOnSPDU_24"/>
    <FSDeviceSend PDin="PD" PortNum="valid" DCount="4" SDset="0" DCommErr="0" DTimeout="0" CRC="valid"/>
    <FSDeviceReceive PDout="PD" PortNum="invalid" MCount="4" setSD="0" ChFAckReq="0" CRC="valid"/>
    <Transition SourceState="WaitOnSPDU_24" TargetState="PrepareResponse_25"/>
```

```
    <Transition SourceState="PrepareResponse_25" TargetState="WaitOnSPDU_26"/>
    <FSDeviceSend PDin="PD" PortNum="valid" DCount="3" SDset="1" DCommErr="1" DTimeout="0" CRC="valid"/>
  </FSDeviceSclTestCaseSteps>
</Testroot>
```

9.2.68 Test script 68

Table 122 defines the test conditions for this test case. The associated XML file contains steps and message parameters for the state flow check in case of setSD error and MCount = 0.

Table 122 – FS-Device test script 68

TEST CASE ATTRIBUTES	IDENTIFICATION / REFERENCE
Identification (ID)	SDCI_FSTC_0119
Name	FSTCD_SCLD_FLOW_SETSD1MC0
Purpose (short)	
Equipment under test (EUT)	FS-Device
Test case version	1.0
Category / type	FS-Device automated SCL protocol test
Specification (clause)	[3] clause 11.3.3, Figure 37 (services); clause 11.5.3, Figure 42 (state chart)
Configuration / setup	See Table 54
TEST CASE	**CONDITIONS / PERFORMANCE**
Purpose (detailed)	Protocol flow in case of distinct error
Precondition	FS-Device waiting for the first message
Procedure	See XML file "IO-Link-Safety_spec_device_final_testsuite_testcase_68.xml"
Test parameter	See Table 54 and XML file
Post condition	–
TEST CASE RESULTS	**CHECK / REACTION**
Evaluation	Comparison of expected and received values according to the XML file
Test passed	Comparison OK
Test failed (examples)	Comparison not OK
Report	Printout of the automated SCL protocol tester <pass/fail>

Content of file "IO-Link-Safety_spec_device_final_testsuite_testcase_68.xml":

```xml
<?xml version="1.0" encoding="UTF-8"?>
<Testroot xsi:noNamespaceSchemaLocation="IO-Link-Safety-Test-Procedure_Types_V1.0.xsd"
xmlns:xsi="http://www.w3.org/2001/XMLSchema-instance" version="1.2" name="tc_68" date="20.11.2018: 14:01:13.948">
  <FSDeviceSclTestCaseSteps>
    <Transition SourceState="Init" TargetState="SystemStart_20"/>
    <Transition SourceState="SystemStart_20" TargetState="WaitOnSPDU_21"/>
    <FSDeviceReceive PDout="PD" PortNum="valid" MCount="0" setSD="1" ChFAckReq="0" CRC="valid"/>
    <Transition SourceState="WaitOnSPDU_21" TargetState="CheckSPDU_22"/>
    <Transition SourceState="CheckSPDU_22" TargetState="PrepareResponse_23"/>
    <Transition SourceState="PrepareResponse_23" TargetState="WaitOnSPDU_24"/>
    <FSDeviceSend PDin="PD" PortNum="valid" DCount="7" SDset="1" DCommErr="0" DTimeout="0" CRC="valid"/>
    <FSDeviceReceive PDout="PD" PortNum="valid" MCount="1" setSD="0" ChFAckReq="0" CRC="valid"/>
    <Transition SourceState="WaitOnSPDU_24" TargetState="CheckSPDU_22"/>
    <Transition SourceState="CheckSPDU_22" TargetState="PrepareResponse_23"/>
    <Transition SourceState="PrepareResponse_23" TargetState="WaitOnSPDU_24"/>
    <FSDeviceSend PDin="PD" PortNum="valid" DCount="6" SDset="1" DCommErr="0" DTimeout="0" CRC="valid"/>
    <FSDeviceReceive PDout="PD" PortNum="valid" MCount="0" setSD="0" ChFAckReq="0" CRC="valid"/>
    <Transition SourceState="WaitOnSPDU_24" TargetState="CheckSPDU_22"/>
    <Transition SourceState="CheckSPDU_22" TargetState="PrepareResponse_23"/>
    <Transition SourceState="PrepareResponse_23" TargetState="WaitOnSPDU_24"/>
    <FSDeviceSend PDin="PD" PortNum="valid" DCount="7" SDset="1" DCommErr="0" DTimeout="0" CRC="valid"/>
    <FSDeviceReceive PDout="PD" PortNum="valid" MCount="1" setSD="0" ChFAckReq="0" CRC="valid"/>
    <Transition SourceState="WaitOnSPDU_24" TargetState="CheckSPDU_22"/>
    <Transition SourceState="CheckSPDU_22" TargetState="PrepareResponse_23"/>
    <Transition SourceState="PrepareResponse_23" TargetState="WaitOnSPDU_24"/>
    <FSDeviceSend PDin="PD" PortNum="valid" DCount="6" SDset="0" DCommErr="0" DTimeout="0" CRC="valid"/>
    <FSDeviceReceive PDout="PD" PortNum="valid" MCount="1" setSD="0" ChFAckReq="0" CRC="valid"/>
    <Transition SourceState="WaitOnSPDU_24" TargetState="WaitOnSPDU_24"/>
  </FSDeviceSclTestCaseSteps>
```

```
</Testroot>
```

9.2.69 Test script 69

Table 123 defines the test conditions for this test case. The associated XML file contains steps and message parameters for the state flow check in case of setSD error, MCount = 0, and DCommErr.

Table 123 – FS-Device test script 69

TEST CASE ATTRIBUTES	IDENTIFICATION / REFERENCE
Identification (ID)	SDCI_FSTC_0120
Name	FSTCD_SCLD_FLOW_SETSD1MC0DCE1
Purpose (short)	
Equipment under test (EUT)	FS-Device
Test case version	1.0
Category / type	FS-Device automated SCL protocol test
Specification (clause)	[3] clause 11.3.3, Figure 37 (services); clause 11.5.3, Figure 42 (state chart)
Configuration / setup	See Table 54
TEST CASE	**CONDITIONS / PERFORMANCE**
Purpose (detailed)	Protocol flow in case of distinct error
Precondition	FS-Device waiting for the first message
Procedure	See XML file "IO-Link-Safety_spec_device_final_testsuite_testcase_69.xml"
Test parameter	See Table 54 and XML file
Post condition	–
TEST CASE RESULTS	**CHECK / REACTION**
Evaluation	Comparison of expected and received values according to the XML file
Test passed	Comparison OK
Test failed (examples)	Comparison not OK
Report	Printout of the automated SCL protocol tester <pass/fail>

Content of file "IO-Link-Safety_spec_device_final_testsuite_testcase_69.xml":

```xml
<?xml version="1.0" encoding="UTF-8"?>
<Testroot xsi:noNamespaceSchemaLocation="IO-Link-Safety-Test-Procedure_Types_V1.0.xsd"
xmlns:xsi="http://www.w3.org/2001/XMLSchema-instance" version="1.2" name="tc_69" date="20.11.2018: 14:01:13.948">
  <FSDeviceSclTestCaseSteps>
    <Transition SourceState="Init" TargetState="SystemStart_20"/>
    <Transition SourceState="SystemStart_20" TargetState="WaitOnSPDU_21"/>
    <FSDeviceReceive PDout="PD" PortNum="valid" MCount="0" setSD="1" ChFAckReq="0" CRC="valid"/>
    <Transition SourceState="WaitOnSPDU_21" TargetState="CheckSPDU_22"/>
    <Transition SourceState="CheckSPDU_22" TargetState="PrepareResponse_23"/>
    <Transition SourceState="PrepareResponse_23" TargetState="WaitOnSPDU_24"/>
    <FSDeviceSend PDin="PD" PortNum="valid" DCount="7" SDset="1" DCommErr="0" DTimeout="0" CRC="valid"/>
    <FSDeviceReceive PDout="PD" PortNum="valid" MCount="1" setSD="0" ChFAckReq="0" CRC="valid"/>
    <Transition SourceState="WaitOnSPDU_24" TargetState="CheckSPDU_22"/>
    <Transition SourceState="CheckSPDU_22" TargetState="PrepareResponse_23"/>
    <Transition SourceState="PrepareResponse_23" TargetState="WaitOnSPDU_24"/>
    <FSDeviceSend PDin="PD" PortNum="valid" DCount="6" SDset="1" DCommErr="0" DTimeout="0" CRC="valid"/>
    <FSDeviceReceive PDout="PD" PortNum="valid" MCount="0" setSD="0" ChFAckReq="0" CRC="valid"/>
    <Transition SourceState="WaitOnSPDU_24" TargetState="CheckSPDU_22"/>
    <Transition SourceState="CheckSPDU_22" TargetState="PrepareResponse_23"/>
    <Transition SourceState="PrepareResponse_23" TargetState="WaitOnSPDU_24"/>
    <FSDeviceSend PDin="PD" PortNum="valid" DCount="7" SDset="1" DCommErr="0" DTimeout="0" CRC="valid"/>
    <FSDeviceReceive PDout="PD" PortNum="valid" MCount="1" setSD="0" ChFAckReq="0" CRC="valid"/>
    <Transition SourceState="WaitOnSPDU_24" TargetState="CheckSPDU_22"/>
    <Transition SourceState="CheckSPDU_22" TargetState="PrepareResponse_23"/>
    <Transition SourceState="PrepareResponse_23" TargetState="WaitOnSPDU_24"/>
    <FSDeviceSend PDin="PD" PortNum="valid" DCount="6" SDset="0" DCommErr="0" DTimeout="0" CRC="valid"/>
    <FSDeviceReceive PDout="PD" PortNum="invalid" MCount="0" setSD="0" ChFAckReq="0" CRC="valid"/>
    <Transition SourceState="WaitOnSPDU_24" TargetState="PrepareResponse_25"/>
```

```
    <Transition SourceState="PrepareResponse_25" TargetState="WaitOnSPDU_26"/>
    <FSDeviceSend PDin="PD" PortNum="valid" DCount="7" SDset="1" DCommErr="1" DTimeout="0" CRC="valid"/>
  </FSDeviceSclTestCaseSteps>
</Testroot>
```

9.2.70 Test script 70

Table 124 defines the test conditions for this test case. The associated XML file contains steps and message parameters for the state flow check in case of setSD error, MCount = 0, and DCommErr.

Table 124 – FS-Device test script 70

TEST CASE ATTRIBUTES	IDENTIFICATION / REFERENCE
Identification (ID)	SDCI_FSTC_0121
Name	FSTCD_SCLD_FLOW_SETSD1MC0DCE1
Purpose (short)	
Equipment under test (EUT)	FS-Device
Test case version	1.0
Category / type	FS-Device automated SCL protocol test
Specification (clause)	[3] clause 11.3.3, Figure 37 (services); clause 11.5.3, Figure 42 (state chart)
Configuration / setup	See Table 54
TEST CASE	**CONDITIONS / PERFORMANCE**
Purpose (detailed)	Protocol flow in case of distinct error
Precondition	FS-Device waiting for the first message
Procedure	See XML file "IO-Link-Safety_spec_device_final_testsuite_testcase_70.xml"
Test parameter	See Table 54 and XML file
Post condition	–
TEST CASE RESULTS	**CHECK / REACTION**
Evaluation	Comparison of expected and received values according to the XML file
Test passed	Comparison OK
Test failed (examples)	Comparison not OK
Report	Printout of the automated SCL protocol tester <pass/fail>

Content of file "IO-Link-Safety_spec_device_final_testsuite_testcase_70.xml":

```
<?xml version="1.0" encoding="UTF-8"?>
<Testroot xsi:noNamespaceSchemaLocation="IO-Link-Safety-Test-Procedure_Types_V1.0.xsd"
xmlns:xsi="http://www.w3.org/2001/XMLSchema-instance" version="1.2" name="tc_70" date="20.11.2018: 14:01:13.949">
  <FSDeviceSclTestCaseSteps>
    <Transition SourceState="Init" TargetState="SystemStart_20"/>
    <Transition SourceState="SystemStart_20" TargetState="WaitOnSPDU_21"/>
    <FSDeviceReceive PDout="PD" PortNum="valid" MCount="0" setSD="1" ChFAckReq="0" CRC="valid"/>
    <Transition SourceState="WaitOnSPDU_21" TargetState="CheckSPDU_22"/>
    <Transition SourceState="CheckSPDU_22" TargetState="PrepareResponse_23"/>
    <Transition SourceState="PrepareResponse_23" TargetState="WaitOnSPDU_24"/>
    <FSDeviceSend PDin="PD" PortNum="valid" DCount="7" SDset="1" DCommErr="0" DTimeout="0" CRC="valid"/>
    <FSDeviceReceive PDout="PD" PortNum="valid" MCount="1" setSD="0" ChFAckReq="0" CRC="valid"/>
    <Transition SourceState="WaitOnSPDU_24" TargetState="CheckSPDU_22"/>
    <Transition SourceState="CheckSPDU_22" TargetState="PrepareResponse_23"/>
    <Transition SourceState="PrepareResponse_23" TargetState="WaitOnSPDU_24"/>
    <FSDeviceSend PDin="PD" PortNum="valid" DCount="6" SDset="1" DCommErr="0" DTimeout="0" CRC="valid"/>
    <FSDeviceReceive PDout="PD" PortNum="valid" MCount="0" setSD="0" ChFAckReq="0" CRC="valid"/>
    <Transition SourceState="WaitOnSPDU_24" TargetState="CheckSPDU_22"/>
    <Transition SourceState="CheckSPDU_22" TargetState="PrepareResponse_23"/>
    <Transition SourceState="PrepareResponse_23" TargetState="WaitOnSPDU_24"/>
    <FSDeviceSend PDin="PD" PortNum="valid" DCount="7" SDset="1" DCommErr="0" DTimeout="0" CRC="valid"/>
    <FSDeviceReceive PDout="PD" PortNum="valid" MCount="1" setSD="0" ChFAckReq="0" CRC="valid"/>
    <Transition SourceState="WaitOnSPDU_24" TargetState="CheckSPDU_22"/>
    <Transition SourceState="CheckSPDU_22" TargetState="PrepareResponse_23"/>
    <Transition SourceState="PrepareResponse_23" TargetState="WaitOnSPDU_24"/>
    <FSDeviceSend PDin="PD" PortNum="valid" DCount="6" SDset="0" DCommErr="0" DTimeout="0" CRC="valid"/>
    <FSDeviceReceive PDout="PD" PortNum="invalid" MCount="2" setSD="0" ChFAckReq="0" CRC="valid"/>
    <Transition SourceState="WaitOnSPDU_24" TargetState="PrepareResponse_25"/>
```

```
    <Transition SourceState="PrepareResponse_25" TargetState="WaitOnSPDU_26"/>
    <FSDeviceSend PDin="PD" PortNum="valid" DCount="5" SDset="1" DCommErr="1" DTimeout="0" CRC="valid"/>
  </FSDeviceSclTestCaseSteps>
</Testroot>
```

9.2.71 Test script 71

Table 125 defines the test conditions for this test case. The associated XML file contains steps and message parameters for the state flow check in case of setSD error, MCount = 0, and DCommErr.

Table 125 – FS-Device test script 71

TEST CASE ATTRIBUTES	IDENTIFICATION / REFERENCE
Identification (ID)	SDCI_FSTC_0122
Name	FSTCD_SCLD_FLOW_SETSD1MC0DCE1
Purpose (short)	
Equipment under test (EUT)	FS-Device
Test case version	1.0
Category / type	FS-Device automated SCL protocol test
Specification (clause)	[3] clause 11.3.3, Figure 37 (services); clause 11.5.3, Figure 42 (state chart)
Configuration / setup	See Table 54
TEST CASE	**CONDITIONS / PERFORMANCE**
Purpose (detailed)	Protocol flow in case of distinct error
Precondition	FS-Device waiting for the first message
Procedure	See XML file "IO-Link-Safety_spec_device_final_testsuite_testcase_71.xml"
Test parameter	See Table 54 and XML file
Post condition	–
TEST CASE RESULTS	**CHECK / REACTION**
Evaluation	Comparison of expected and received values according to the XML file
Test passed	Comparison OK
Test failed (examples)	Comparison not OK
Report	Printout of the automated SCL protocol tester <pass/fail>

Content of file "IO-Link-Safety_spec_device_final_testsuite_testcase_71.xml":

```xml
<?xml version="1.0" encoding="UTF-8"?>
<Testroot xsi:noNamespaceSchemaLocation="IO-Link-Safety-Test-Procedure_Types_V1.0.xsd"
xmlns:xsi="http://www.w3.org/2001/XMLSchema-instance" version="1.2" name="tc_71" date="20.11.2018: 14:01:13.949">
  <FSDeviceSclTestCaseSteps>
    <Transition SourceState="Init" TargetState="SystemStart_20"/>
    <Transition SourceState="SystemStart_20" TargetState="WaitOnSPDU_21"/>
    <FSDeviceReceive PDout="PD" PortNum="valid" MCount="0" setSD="1" ChFAckReq="0" CRC="valid"/>
    <Transition SourceState="WaitOnSPDU_21" TargetState="CheckSPDU_22"/>
    <Transition SourceState="CheckSPDU_22" TargetState="PrepareResponse_23"/>
    <Transition SourceState="PrepareResponse_23" TargetState="WaitOnSPDU_24"/>
    <FSDeviceSend PDin="PD" PortNum="valid" DCount="7" SDset="1" DCommErr="0" DTimeout="0" CRC="valid"/>
    <FSDeviceReceive PDout="PD" PortNum="valid" MCount="1" setSD="0" ChFAckReq="0" CRC="valid"/>
    <Transition SourceState="WaitOnSPDU_24" TargetState="CheckSPDU_22"/>
    <Transition SourceState="CheckSPDU_22" TargetState="PrepareResponse_23"/>
    <Transition SourceState="PrepareResponse_23" TargetState="WaitOnSPDU_24"/>
    <FSDeviceSend PDin="PD" PortNum="valid" DCount="6" SDset="1" DCommErr="0" DTimeout="0" CRC="valid"/>
    <FSDeviceReceive PDout="PD" PortNum="valid" MCount="0" setSD="0" ChFAckReq="0" CRC="valid"/>
    <Transition SourceState="WaitOnSPDU_24" TargetState="CheckSPDU_22"/>
    <Transition SourceState="CheckSPDU_22" TargetState="PrepareResponse_23"/>
    <Transition SourceState="PrepareResponse_23" TargetState="WaitOnSPDU_24"/>
    <FSDeviceSend PDin="PD" PortNum="valid" DCount="7" SDset="1" DCommErr="0" DTimeout="0" CRC="valid"/>
    <FSDeviceReceive PDout="PD" PortNum="valid" MCount="1" setSD="0" ChFAckReq="0" CRC="valid"/>
    <Transition SourceState="WaitOnSPDU_24" TargetState="CheckSPDU_22"/>
    <Transition SourceState="CheckSPDU_22" TargetState="PrepareResponse_23"/>
    <Transition SourceState="PrepareResponse_23" TargetState="WaitOnSPDU_24"/>
    <FSDeviceSend PDin="PD" PortNum="valid" DCount="6" SDset="0" DCommErr="0" DTimeout="0" CRC="valid"/>
    <FSDeviceReceive PDout="PD" PortNum="valid" MCount="0" setSD="0" ChFAckReq="0" CRC="invalid"/>
    <Transition SourceState="WaitOnSPDU_24" TargetState="PrepareResponse_25"/>
```

```
    <Transition SourceState="PrepareResponse_25" TargetState="WaitOnSPDU_26"/>
    <FSDeviceSend PDin="PD" PortNum="valid" DCount="7" SDset="1" DCommErr="1" DTimeout="0" CRC="valid"/>
  </FSDeviceSclTestCaseSteps>
</Testroot>
```

9.2.72 Test script 72

Table 126 defines the test conditions for this test case. The associated XML file contains steps and message parameters for the state flow check in case of setSD error, MCount = 0, and DCommErr.

Table 126 – FS-Device test script 72

TEST CASE ATTRIBUTES	IDENTIFICATION / REFERENCE
Identification (ID)	SDCI_FSTC_0123
Name	FSTCD_SCLD_FLOW_SETSD1MC0DCE1
Purpose (short)	
Equipment under test (EUT)	FS-Device
Test case version	1.0
Category / type	FS-Device automated SCL protocol test
Specification (clause)	[3] clause 11.3.3, Figure 37 (services); clause 11.5.3, Figure 42 (state chart)
Configuration / setup	See Table 54
TEST CASE	**CONDITIONS / PERFORMANCE**
Purpose (detailed)	Protocol flow in case of distinct error
Precondition	FS-Device waiting for the first message
Procedure	See XML file "IO-Link-Safety_spec_device_final_testsuite_testcase_72.xml"
Test parameter	See Table 54 and XML file
Post condition	–
TEST CASE RESULTS	**CHECK / REACTION**
Evaluation	Comparison of expected and received values according to the XML file
Test passed	Comparison OK
Test failed (examples)	Comparison not OK
Report	Printout of the automated SCL protocol tester <pass/fail>

Content of file "IO-Link-Safety_spec_device_final_testsuite_testcase_72.xml":

```
<?xml version="1.0" encoding="UTF-8"?>
<Testroot xsi:noNamespaceSchemaLocation="IO-Link-Safety-Test-Procedure_Types_V1.0.xsd"
xmlns:xsi="http://www.w3.org/2001/XMLSchema-instance" version="1.2" name="tc_72" date="20.11.2018: 14:01:13.949">
  <FSDeviceSclTestCaseSteps>
    <Transition SourceState="Init" TargetState="SystemStart_20"/>
    <Transition SourceState="SystemStart_20" TargetState="WaitOnSPDU_21"/>
    <FSDeviceReceive PDout="PD" PortNum="valid" MCount="0" setSD="1" ChFAckReq="0" CRC="valid"/>
    <Transition SourceState="WaitOnSPDU_21" TargetState="CheckSPDU_22"/>
    <Transition SourceState="CheckSPDU_22" TargetState="PrepareResponse_23"/>
    <Transition SourceState="PrepareResponse_23" TargetState="WaitOnSPDU_24"/>
    <FSDeviceSend PDin="PD" PortNum="valid" DCount="7" SDset="1" DCommErr="0" DTimeout="0" CRC="valid"/>
    <FSDeviceReceive PDout="PD" PortNum="valid" MCount="1" setSD="0" ChFAckReq="0" CRC="valid"/>
    <Transition SourceState="WaitOnSPDU_24" TargetState="CheckSPDU_22"/>
    <Transition SourceState="CheckSPDU_22" TargetState="PrepareResponse_23"/>
    <Transition SourceState="PrepareResponse_23" TargetState="WaitOnSPDU_24"/>
    <FSDeviceSend PDin="PD" PortNum="valid" DCount="6" SDset="1" DCommErr="0" DTimeout="0" CRC="valid"/>
    <FSDeviceReceive PDout="PD" PortNum="valid" MCount="0" setSD="0" ChFAckReq="0" CRC="valid"/>
    <Transition SourceState="WaitOnSPDU_24" TargetState="CheckSPDU_22"/>
    <Transition SourceState="CheckSPDU_22" TargetState="PrepareResponse_23"/>
    <Transition SourceState="PrepareResponse_23" TargetState="WaitOnSPDU_24"/>
    <FSDeviceSend PDin="PD" PortNum="valid" DCount="7" SDset="1" DCommErr="0" DTimeout="0" CRC="valid"/>
    <FSDeviceReceive PDout="PD" PortNum="valid" MCount="1" setSD="0" ChFAckReq="0" CRC="valid"/>
    <Transition SourceState="WaitOnSPDU_24" TargetState="CheckSPDU_22"/>
    <Transition SourceState="CheckSPDU_22" TargetState="PrepareResponse_23"/>
    <Transition SourceState="PrepareResponse_23" TargetState="WaitOnSPDU_24"/>
    <FSDeviceSend PDin="PD" PortNum="valid" DCount="6" SDset="0" DCommErr="0" DTimeout="0" CRC="valid"/>
    <FSDeviceReceive PDout="PD" PortNum="valid" MCount="2" setSD="0" ChFAckReq="0" CRC="invalid"/>
    <Transition SourceState="WaitOnSPDU_24" TargetState="PrepareResponse_25"/>
```

```
    <Transition SourceState="PrepareResponse_25" TargetState="WaitOnSPDU_26"/>
    <FSDeviceSend PDin="PD" PortNum="valid" DCount="5" SDset="1" DCommErr="1" DTimeout="0" CRC="valid"/>
  </FSDeviceSclTestCaseSteps>
</Testroot>
```

9.2.73 Test script 73

Table 127 defines the test conditions for this test case. The associated XML file contains steps and message parameters for the state flow check in case of setSD error, MCount = 0, and DCommErr.

Table 127 – FS-Device test script 73

TEST CASE ATTRIBUTES	IDENTIFICATION / REFERENCE
Identification (ID)	SDCI_FSTC_0124
Name	FSTCD_SCLD_FLOW_SETSD1MC0DCE1
Purpose (short)	
Equipment under test (EUT)	FS-Device
Test case version	1.0
Category / type	FS-Device automated SCL protocol test
Specification (clause)	[3] clause 11.3.3, Figure 37 (services); clause 11.5.3, Figure 42 (state chart)
Configuration / setup	See Table 54
TEST CASE	**CONDITIONS / PERFORMANCE**
Purpose (detailed)	Protocol flow in case of distinct error
Precondition	FS-Device waiting for the first message
Procedure	See XML file "IO-Link-Safety_spec_device_final_testsuite_testcase_73.xml"
Test parameter	See Table 54 and XML file
Post condition	–
TEST CASE RESULTS	**CHECK / REACTION**
Evaluation	Comparison of expected and received values according to the XML file
Test passed	Comparison OK
Test failed (examples)	Comparison not OK
Report	Printout of the automated SCL protocol tester <pass/fail>

Content of file "IO-Link-Safety_spec_device_final_testsuite_testcase_73.xml":

```
<?xml version="1.0" encoding="UTF-8"?>
<Testroot xsi:noNamespaceSchemaLocation="IO-Link-Safety-Test-Procedure_Types_V1.0.xsd"
xmlns:xsi="http://www.w3.org/2001/XMLSchema-instance" version="1.2" name="tc_73" date="20.11.2018: 14:01:13.949">
  <FSDeviceSclTestCaseSteps>
    <Transition SourceState="Init" TargetState="SystemStart_20"/>
    <Transition SourceState="SystemStart_20" TargetState="WaitOnSPDU_21"/>
    <FSDeviceReceive PDout="PD" PortNum="valid" MCount="0" setSD="1" ChFAckReq="0" CRC="valid"/>
    <Transition SourceState="WaitOnSPDU_21" TargetState="CheckSPDU_22"/>
    <Transition SourceState="CheckSPDU_22" TargetState="PrepareResponse_23"/>
    <Transition SourceState="PrepareResponse_23" TargetState="WaitOnSPDU_24"/>
    <FSDeviceSend PDin="PD" PortNum="valid" DCount="7" SDset="1" DCommErr="0" DTimeout="0" CRC="valid"/>
    <FSDeviceReceive PDout="PD" PortNum="valid" MCount="1" setSD="0" ChFAckReq="0" CRC="valid"/>
    <Transition SourceState="WaitOnSPDU_24" TargetState="CheckSPDU_22"/>
    <Transition SourceState="CheckSPDU_22" TargetState="PrepareResponse_23"/>
    <Transition SourceState="PrepareResponse_23" TargetState="WaitOnSPDU_24"/>
    <FSDeviceSend PDin="PD" PortNum="valid" DCount="6" SDset="1" DCommErr="0" DTimeout="0" CRC="valid"/>
    <FSDeviceReceive PDout="PD" PortNum="valid" MCount="2" setSD="0" ChFAckReq="0" CRC="valid"/>
    <Transition SourceState="WaitOnSPDU_24" TargetState="CheckSPDU_22"/>
    <Transition SourceState="CheckSPDU_22" TargetState="PrepareResponse_23"/>
    <Transition SourceState="PrepareResponse_23" TargetState="WaitOnSPDU_24"/>
    <FSDeviceSend PDin="PD" PortNum="valid" DCount="5" SDset="1" DCommErr="0" DTimeout="0" CRC="valid"/>
    <FSDeviceReceive PDout="PD" PortNum="valid" MCount="3" setSD="0" ChFAckReq="0" CRC="valid"/>
    <Transition SourceState="WaitOnSPDU_24" TargetState="CheckSPDU_22"/>
    <Transition SourceState="CheckSPDU_22" TargetState="PrepareResponse_23"/>
    <Transition SourceState="PrepareResponse_23" TargetState="WaitOnSPDU_24"/>
    <FSDeviceSend PDin="PD" PortNum="valid" DCount="4" SDset="0" DCommErr="0" DTimeout="0" CRC="valid"/>
    <FSDeviceReceive PDout="PD" PortNum="valid" MCount="5" setSD="0" ChFAckReq="0" CRC="valid"/>
    <Transition SourceState="WaitOnSPDU_24" TargetState="CheckSPDU_22"/>
```

```
    <Transition SourceState="CheckSPDU_22" TargetState="PrepareResponse_25"/>
    <Transition SourceState="PrepareResponse_25" TargetState="WaitOnSPDU_26"/>
    <FSDeviceSend PDin="PD" PortNum="valid" DCount="2" SDset="1" DCommErr="1" DTimeout="0" CRC="valid"/>
  </FSDeviceSclTestCaseSteps>
</Testroot>
```

9.2.74 Test script 74

Table 128 defines the test conditions for this test case. The associated XML file contains steps and message parameters for the state flow check in case of setSD error, MCount = 0, and DCommErr.

Table 128 – FS-Device test script 74

TEST CASE ATTRIBUTES	IDENTIFICATION / REFERENCE
Identification (ID)	SDCI_FSTC_0125
Name	FSTCD_SCLD_FLOW_SETSD1MC0DCE1
Purpose (short)	
Equipment under test (EUT)	FS-Device
Test case version	1.0
Category / type	FS-Device automated SCL protocol test
Specification (clause)	[3] clause 11.3.3, Figure 37 (services); clause 11.5.3, Figure 42 (state chart)
Configuration / setup	See Table 54
TEST CASE	**CONDITIONS / PERFORMANCE**
Purpose (detailed)	Protocol flow in case of distinct error
Precondition	FS-Device waiting for the first message
Procedure	See XML file "IO-Link-Safety_spec_device_final_testsuite_testcase_74.xml"
Test parameter	See Table 54 and XML file
Post condition	–
TEST CASE RESULTS	**CHECK / REACTION**
Evaluation	Comparison of expected and received values according to the XML file
Test passed	Comparison OK
Test failed (examples)	Comparison not OK
Report	Printout of the automated SCL protocol tester <pass/fail>

Content of file "IO-Link-Safety_spec_device_final_testsuite_testcase_74.xml":

```xml
<?xml version="1.0" encoding="UTF-8"?>
<Testroot xsi:noNamespaceSchemaLocation="IO-Link-Safety-Test-Procedure_Types_V1.0.xsd"
xmlns:xsi="http://www.w3.org/2001/XMLSchema-instance" version="1.2" name="tc_73" date="20.11.2018: 14:01:13.949">
  <FSDeviceSclTestCaseSteps>
    <Transition SourceState="Init" TargetState="SystemStart_20"/>
    <Transition SourceState="SystemStart_20" TargetState="WaitOnSPDU_21"/>
    <FSDeviceReceive PDout="PD" PortNum="valid" MCount="0" setSD="1" ChFAckReq="0" CRC="valid"/>
    <Transition SourceState="WaitOnSPDU_21" TargetState="CheckSPDU_22"/>
    <Transition SourceState="CheckSPDU_22" TargetState="PrepareResponse_23"/>
    <Transition SourceState="PrepareResponse_23" TargetState="WaitOnSPDU_24"/>
    <FSDeviceSend PDin="PD" PortNum="valid" DCount="7" SDset="1" DCommErr="0" DTimeout="0" CRC="valid"/>
    <FSDeviceReceive PDout="PD" PortNum="valid" MCount="1" setSD="0" ChFAckReq="0" CRC="valid"/>
    <Transition SourceState="WaitOnSPDU_24" TargetState="CheckSPDU_22"/>
    <Transition SourceState="CheckSPDU_22" TargetState="PrepareResponse_23"/>
    <Transition SourceState="PrepareResponse_23" TargetState="WaitOnSPDU_24"/>
    <FSDeviceSend PDin="PD" PortNum="valid" DCount="6" SDset="1" DCommErr="0" DTimeout="0" CRC="valid"/>
    <FSDeviceReceive PDout="PD" PortNum="valid" MCount="2" setSD="0" ChFAckReq="0" CRC="valid"/>
    <Transition SourceState="WaitOnSPDU_24" TargetState="CheckSPDU_22"/>
    <Transition SourceState="CheckSPDU_22" TargetState="PrepareResponse_23"/>
    <Transition SourceState="PrepareResponse_23" TargetState="WaitOnSPDU_24"/>
    <FSDeviceSend PDin="PD" PortNum="valid" DCount="5" SDset="1" DCommErr="0" DTimeout="0" CRC="valid"/>
    <FSDeviceReceive PDout="PD" PortNum="valid" MCount="3" setSD="0" ChFAckReq="0" CRC="valid"/>
    <Transition SourceState="WaitOnSPDU_24" TargetState="CheckSPDU_22"/>
    <Transition SourceState="CheckSPDU_22" TargetState="PrepareResponse_23"/>
    <Transition SourceState="PrepareResponse_23" TargetState="WaitOnSPDU_24"/>
    <FSDeviceSend PDin="PD" PortNum="valid" DCount="4" SDset="0" DCommErr="0" DTimeout="0" CRC="valid"/>
    <FSDeviceReceive PDout="PD" PortNum="valid" MCount="5" setSD="0" ChFAckReq="0" CRC="valid"/>
    <Transition SourceState="WaitOnSPDU_24" TargetState="CheckSPDU_22"/>
```

```
    <Transition SourceState="CheckSPDU_22" TargetState="PrepareResponse_25"/>
    <Transition SourceState="PrepareResponse_25" TargetState="WaitOnSPDU_26"/>
    <FSDeviceSend PDin="PD" PortNum="valid" DCount="2" SDset="1" DCommErr="1" DTimeout="0" CRC="valid"/>
  </FSDeviceSclTestCaseSteps>
</Testroot>
```

9.2.75 Test script 75

Table 129 defines the test conditions for this test case. The associated XML file contains steps and message parameters for the state flow check in case of setSD error, MCount = 0, and DCommErr.

Table 129 – FS-Device test script 75

TEST CASE ATTRIBUTES	IDENTIFICATION / REFERENCE
Identification (ID)	SDCI_FSTC_0126
Name	FSTCD_SCLD_FLOW_SETSD1MC0DCE1
Purpose (short)	
Equipment under test (EUT)	FS-Device
Test case version	1.0
Category / type	FS-Device automated SCL protocol test
Specification (clause)	[3] clause 11.3.3, Figure 37 (services); clause 11.5.3, Figure 42 (state chart)
Configuration / setup	See Table 54
TEST CASE	**CONDITIONS / PERFORMANCE**
Purpose (detailed)	Protocol flow in case of distinct error
Precondition	FS-Device waiting for the first message
Procedure	See XML file "IO-Link-Safety_spec_device_final_testsuite_testcase_75.xml"
Test parameter	See Table 54 and XML file
Post condition	–
TEST CASE RESULTS	**CHECK / REACTION**
Evaluation	Comparison of expected and received values according to the XML file
Test passed	Comparison OK
Test failed (examples)	Comparison not OK
Report	Printout of the automated SCL protocol tester <pass/fail>

Content of file "IO-Link-Safety_spec_device_final_testsuite_testcase_75.xml":

```
<?xml version="1.0" encoding="UTF-8"?>
<Testroot xsi:noNamespaceSchemaLocation="IO-Link-Safety-Test-Procedure_Types_V1.0.xsd"
xmlns:xsi="http://www.w3.org/2001/XMLSchema-instance" version="1.2" name="tc_75" date="20.11.2018: 14:01:13.950">
  <FSDeviceSclTestCaseSteps>
    <Transition SourceState="Init" TargetState="SystemStart_20"/>
    <Transition SourceState="SystemStart_20" TargetState="WaitOnSPDU_21"/>
    <FSDeviceReceive PDout="PD" PortNum="valid" MCount="0" setSD="1" ChFAckReq="0" CRC="valid"/>
    <Transition SourceState="WaitOnSPDU_21" TargetState="CheckSPDU_22"/>
    <Transition SourceState="CheckSPDU_22" TargetState="PrepareResponse_23"/>
    <Transition SourceState="PrepareResponse_23" TargetState="WaitOnSPDU_24"/>
    <FSDeviceSend PDin="PD" PortNum="valid" DCount="7" SDset="1" DCommErr="0" DTimeout="0" CRC="valid"/>
    <FSDeviceReceive PDout="PD" PortNum="valid" MCount="1" setSD="0" ChFAckReq="0" CRC="valid"/>
    <Transition SourceState="WaitOnSPDU_24" TargetState="CheckSPDU_22"/>
    <Transition SourceState="CheckSPDU_22" TargetState="PrepareResponse_23"/>
    <Transition SourceState="PrepareResponse_23" TargetState="WaitOnSPDU_24"/>
    <FSDeviceSend PDin="PD" PortNum="valid" DCount="6" SDset="1" DCommErr="0" DTimeout="0" CRC="valid"/>
    <FSDeviceReceive PDout="PD" PortNum="valid" MCount="2" setSD="0" ChFAckReq="0" CRC="valid"/>
    <Transition SourceState="WaitOnSPDU_24" TargetState="CheckSPDU_22"/>
    <Transition SourceState="CheckSPDU_22" TargetState="PrepareResponse_23"/>
    <Transition SourceState="PrepareResponse_23" TargetState="WaitOnSPDU_24"/>
    <FSDeviceSend PDin="PD" PortNum="valid" DCount="5" SDset="1" DCommErr="0" DTimeout="0" CRC="valid"/>
    <FSDeviceReceive PDout="PD" PortNum="valid" MCount="3" setSD="0" ChFAckReq="0" CRC="valid"/>
    <Transition SourceState="WaitOnSPDU_24" TargetState="CheckSPDU_22"/>
    <Transition SourceState="CheckSPDU_22" TargetState="PrepareResponse_23"/>
    <Transition SourceState="PrepareResponse_23" TargetState="WaitOnSPDU_24"/>
    <FSDeviceSend PDin="PD" PortNum="valid" DCount="4" SDset="0" DCommErr="0" DTimeout="0" CRC="valid"/>
    <FSDeviceReceive PDout="PD" PortNum="valid" MCount="4" setSD="0" ChFAckReq="0" CRC="invalid"/>
    <Transition SourceState="WaitOnSPDU_24" TargetState="PrepareResponse_25"/>
```

```
    <Transition SourceState="PrepareResponse_25" TargetState="WaitOnSPDU_26"/>
    <FSDeviceSend PDin="PD" PortNum="valid" DCount="3" SDset="1" DCommErr="1" DTimeout="0" CRC="valid"/>
  </FSDeviceSclTestCaseSteps>
</Testroot>
```

9.2.76 Test script 76

Table 130 defines the test conditions for this test case. The associated XML file contains steps and message parameters for the state flow check in case of setSD error and MCount = 0.

Table 130 – FS-Device test script 76

TEST CASE ATTRIBUTES	IDENTIFICATION / REFERENCE
Identification (ID)	SDCI_FSTC_0127
Name	FSTCD_SCLD_FLOW_SETSD1MC0
Purpose (short)	
Equipment under test (EUT)	FS-Device
Test case version	1.0
Category / type	FS-Device automated SCL protocol test
Specification (clause)	[3] clause 11.3.3, Figure 37 (services); clause 11.5.3, Figure 42 (state chart)
Configuration / setup	See Table 54
TEST CASE	**CONDITIONS / PERFORMANCE**
Purpose (detailed)	Protocol flow in case of distinct error
Precondition	FS-Device waiting for the first message
Procedure	See XML file "IO-Link-Safety_spec_device_final_testsuite_testcase_76.xml"
Test parameter	See Table 54 and XML file
Post condition	–
TEST CASE RESULTS	**CHECK / REACTION**
Evaluation	Comparison of expected and received values according to the XML file
Test passed	Comparison OK
Test failed (examples)	Comparison not OK
Report	Printout of the automated SCL protocol tester <pass/fail>

Content of file "IO-Link-Safety_spec_device_final_testsuite_testcase_76.xml":


```xml
<?xml version="1.0" encoding="UTF-8"?>
<Testroot xsi:noNamespaceSchemaLocation="IO-Link-Safety-Test-Procedure_Types_V1.0.xsd"
xmlns:xsi="http://www.w3.org/2001/XMLSchema-instance" version="1.2" name="tc_76" date="20.11.2018: 14:01:13.950">
  <FSDeviceSclTestCaseSteps>
    <Transition SourceState="Init" TargetState="SystemStart_20"/>
    <Transition SourceState="SystemStart_20" TargetState="WaitOnSPDU_21"/>
    <FSDeviceReceive PDout="PD" PortNum="valid" MCount="0" setSD="1" ChFAckReq="0" CRC="valid"/>
    <Transition SourceState="WaitOnSPDU_21" TargetState="CheckSPDU_22"/>
    <Transition SourceState="CheckSPDU_22" TargetState="PrepareResponse_23"/>
    <Transition SourceState="PrepareResponse_23" TargetState="WaitOnSPDU_24"/>
    <FSDeviceSend PDin="PD" PortNum="valid" DCount="7" SDset="1" DCommErr="0" DTimeout="0" CRC="valid"/>
    <FSDeviceReceive PDout="PD" PortNum="valid" MCount="1" setSD="0" ChFAckReq="0" CRC="valid"/>
    <Transition SourceState="WaitOnSPDU_24" TargetState="CheckSPDU_22"/>
    <Transition SourceState="CheckSPDU_22" TargetState="PrepareResponse_23"/>
    <Transition SourceState="PrepareResponse_23" TargetState="WaitOnSPDU_24"/>
    <FSDeviceSend PDin="PD" PortNum="valid" DCount="6" SDset="1" DCommErr="0" DTimeout="0" CRC="valid"/>
    <FSDeviceReceive PDout="PD" PortNum="valid" MCount="2" setSD="0" ChFAckReq="0" CRC="valid"/>
    <Transition SourceState="WaitOnSPDU_24" TargetState="CheckSPDU_22"/>
    <Transition SourceState="CheckSPDU_22" TargetState="PrepareResponse_23"/>
    <Transition SourceState="PrepareResponse_23" TargetState="WaitOnSPDU_24"/>
    <FSDeviceSend PDin="PD" PortNum="valid" DCount="5" SDset="1" DCommErr="0" DTimeout="0" CRC="valid"/>
    <FSDeviceReceive PDout="PD" PortNum="valid" MCount="3" setSD="0" ChFAckReq="0" CRC="valid"/>
    <Transition SourceState="WaitOnSPDU_24" TargetState="CheckSPDU_22"/>
    <Transition SourceState="CheckSPDU_22" TargetState="PrepareResponse_23"/>
    <Transition SourceState="PrepareResponse_23" TargetState="WaitOnSPDU_24"/>
    <FSDeviceSend PDin="PD" PortNum="valid" DCount="4" SDset="0" DCommErr="0" DTimeout="0" CRC="valid"/>
    <FSDeviceReceive PDout="PD" PortNum="valid" MCount="4" setSD="0" ChFAckReq="0" CRC="valid"/>
    <Transition SourceState="WaitOnSPDU_24" TargetState="CheckSPDU_22"/>
    <Transition SourceState="CheckSPDU_22" TargetState="PrepareResponse_23"/>
```

```
    <Transition SourceState="PrepareResponse_23" TargetState="WaitOnSPDU_24"/>
    <FSDeviceSend PDin="PD" PortNum="valid" DCount="3" SDset="0" DCommErr="0" DTimeout="0" CRC="valid"/>
    <FSDeviceReceive PDout="PD" PortNum="valid" MCount="4" setSD="0" ChFAckReq="0" CRC="valid"/>
    <Transition SourceState="WaitOnSPDU_24" TargetState="WaitOnSPDU_24"/>
  </FSDeviceSclTestCaseSteps>
</Testroot>
```

9.2.77 Test script 77

Table 131 defines the test conditions for this test case. The associated XML file contains steps and message parameters for the state flow check in case of setSD error, MCount = 0, and DCommErr.

Table 131 – FS-Device test script 77

TEST CASE ATTRIBUTES	IDENTIFICATION / REFERENCE
Identification (ID)	SDCI_FSTC_0128
Name	FSTCD_SCLD_FLOW_SETSD1MC0DCE1
Purpose (short)	
Equipment under test (EUT)	FS-Device
Test case version	1.0
Category / type	FS-Device automated SCL protocol test
Specification (clause)	[3] clause 11.3.3, Figure 37 (services); clause 11.5.3, Figure 42 (state chart)
Configuration / setup	See Table 54
TEST CASE	**CONDITIONS / PERFORMANCE**
Purpose (detailed)	Protocol flow in case of distinct error
Precondition	FS-Device waiting for the first message
Procedure	See XML file "IO-Link-Safety_spec_device_final_testsuite_testcase_77.xml"
Test parameter	See Table 54 and XML file
Post condition	–
TEST CASE RESULTS	**CHECK / REACTION**
Evaluation	Comparison of expected and received values according to the XML file
Test passed	Comparison OK
Test failed (examples)	Comparison not OK
Report	Printout of the automated SCL protocol tester <pass/fail>

Content of file "IO-Link-Safety_spec_device_final_testsuite_testcase_77.xml":

```
<?xml version="1.0" encoding="UTF-8"?>
<Testroot xsi:noNamespaceSchemaLocation="IO-Link-Safety-Test-Procedure_Types_V1.0.xsd"
xmlns:xsi="http://www.w3.org/2001/XMLSchema-instance" version="1.2" name="tc_77" date="20.11.2018: 14:01:13.950">
  <FSDeviceSclTestCaseSteps>
    <Transition SourceState="Init" TargetState="SystemStart_20"/>
    <Transition SourceState="SystemStart_20" TargetState="WaitOnSPDU_21"/>
    <FSDeviceReceive PDout="PD" PortNum="valid" MCount="0" setSD="1" ChFAckReq="0" CRC="valid"/>
    <Transition SourceState="WaitOnSPDU_21" TargetState="CheckSPDU_22"/>
    <Transition SourceState="CheckSPDU_22" TargetState="PrepareResponse_23"/>
    <Transition SourceState="PrepareResponse_23" TargetState="WaitOnSPDU_24"/>
    <FSDeviceSend PDin="PD" PortNum="valid" DCount="7" SDset="1" DCommErr="0" DTimeout="0" CRC="valid"/>
    <FSDeviceReceive PDout="PD" PortNum="valid" MCount="1" setSD="0" ChFAckReq="0" CRC="valid"/>
    <Transition SourceState="WaitOnSPDU_24" TargetState="CheckSPDU_22"/>
    <Transition SourceState="CheckSPDU_22" TargetState="PrepareResponse_23"/>
    <Transition SourceState="PrepareResponse_23" TargetState="WaitOnSPDU_24"/>
    <FSDeviceSend PDin="PD" PortNum="valid" DCount="6" SDset="1" DCommErr="0" DTimeout="0" CRC="valid"/>
    <FSDeviceReceive PDout="PD" PortNum="valid" MCount="2" setSD="0" ChFAckReq="0" CRC="valid"/>
    <Transition SourceState="WaitOnSPDU_24" TargetState="CheckSPDU_22"/>
    <Transition SourceState="CheckSPDU_22" TargetState="PrepareResponse_23"/>
    <Transition SourceState="PrepareResponse_23" TargetState="WaitOnSPDU_24"/>
    <FSDeviceSend PDin="PD" PortNum="valid" DCount="5" SDset="1" DCommErr="0" DTimeout="0" CRC="valid"/>
    <FSDeviceReceive PDout="PD" PortNum="valid" MCount="3" setSD="0" ChFAckReq="0" CRC="valid"/>
    <Transition SourceState="WaitOnSPDU_24" TargetState="CheckSPDU_22"/>
    <Transition SourceState="CheckSPDU_22" TargetState="PrepareResponse_23"/>
    <Transition SourceState="PrepareResponse_23" TargetState="WaitOnSPDU_24"/>
    <FSDeviceSend PDin="PD" PortNum="valid" DCount="4" SDset="0" DCommErr="0" DTimeout="0" CRC="valid"/>
    <FSDeviceReceive PDout="PD" PortNum="valid" MCount="4" setSD="0" ChFAckReq="0" CRC="valid"/>
    <Transition SourceState="WaitOnSPDU_24" TargetState="CheckSPDU_22"/>
```

```
    <Transition SourceState="CheckSPDU_22" TargetState="PrepareResponse_23"/>
    <Transition SourceState="PrepareResponse_23" TargetState="WaitOnSPDU_24"/>
    <FSDeviceSend PDin="PD" PortNum="valid" DCount="3" SDset="0" DCommErr="0" DTimeout="0" CRC="valid"/>
    <FSDeviceReceive PDout="PD" PortNum="invalid" MCount="1" setSD="0" ChFAckReq="0" CRC="valid"/>
    <Transition SourceState="WaitOnSPDU_24" TargetState="PrepareResponse_25"/>
    <Transition SourceState="PrepareResponse_25" TargetState="WaitOnSPDU_26"/>
    <FSDeviceSend PDin="PD" PortNum="valid" DCount="6" SDset="1" DCommErr="1" DTimeout="0" CRC="valid"/>
  </FSDeviceSclTestCaseSteps>
</Testroot>
```

9.2.78 Test script 78

Table 132 defines the test conditions for this test case. The associated XML file contains steps and message parameters for the state flow check in case of setSD error, MCount = 0, and DCommErr.

Table 132 – FS-Device test script 78

TEST CASE ATTRIBUTES	IDENTIFICATION / REFERENCE
Identification (ID)	SDCI_FSTC_0129
Name	FSTCD_SCLD_FLOW_SETSD1MC0DCE1
Purpose (short)	
Equipment under test (EUT)	FS-Device
Test case version	1.0
Category / type	FS-Device automated SCL protocol test
Specification (clause)	[3] clause 11.3.3, Figure 37 (services); clause 11.5.3, Figure 42 (state chart)
Configuration / setup	See Table 54

TEST CASE	CONDITIONS / PERFORMANCE
Purpose (detailed)	Protocol flow in case of distinct error
Precondition	FS-Device waiting for the first message
Procedure	See XML file "IO-Link-Safety_spec_device_final_testsuite_testcase_78.xml"
Test parameter	See Table 54 and XML file
Post condition	–

TEST CASE RESULTS	CHECK / REACTION
Evaluation	Comparison of expected and received values according to the XML file
Test passed	Comparison OK
Test failed (examples)	Comparison not OK
Report	Printout of the automated SCL protocol tester <pass/fail>

Content of file "IO-Link-Safety_spec_device_final_testsuite_testcase_78.xml":

```
<?xml version="1.0" encoding="UTF-8"?>
<Testroot xsi:noNamespaceSchemaLocation="IO-Link-Safety-Test-Procedure_Types_V1.0.xsd"
xmlns:xsi="http://www.w3.org/2001/XMLSchema-instance" version="1.2" name="tc_78" date="20.11.2018: 14:01:13.950">
  <FSDeviceSclTestCaseSteps>
    <Transition SourceState="Init" TargetState="SystemStart_20"/>
    <Transition SourceState="SystemStart_20" TargetState="WaitOnSPDU_21"/>
    <FSDeviceReceive PDout="PD" PortNum="valid" MCount="0" setSD="1" ChFAckReq="0" CRC="valid"/>
    <Transition SourceState="WaitOnSPDU_21" TargetState="CheckSPDU_22"/>
    <Transition SourceState="CheckSPDU_22" TargetState="PrepareResponse_23"/>
    <Transition SourceState="PrepareResponse_23" TargetState="WaitOnSPDU_24"/>
    <FSDeviceSend PDin="PD" PortNum="valid" DCount="7" SDset="1" DCommErr="0" DTimeout="0" CRC="valid"/>
    <FSDeviceReceive PDout="PD" PortNum="valid" MCount="1" setSD="0" ChFAckReq="0" CRC="valid"/>
    <Transition SourceState="WaitOnSPDU_24" TargetState="CheckSPDU_22"/>
    <Transition SourceState="CheckSPDU_22" TargetState="PrepareResponse_23"/>
    <Transition SourceState="PrepareResponse_23" TargetState="WaitOnSPDU_24"/>
    <FSDeviceSend PDin="PD" PortNum="valid" DCount="6" SDset="1" DCommErr="0" DTimeout="0" CRC="valid"/>
    <FSDeviceReceive PDout="PD" PortNum="valid" MCount="2" setSD="0" ChFAckReq="0" CRC="valid"/>
    <Transition SourceState="WaitOnSPDU_24" TargetState="CheckSPDU_22"/>
    <Transition SourceState="CheckSPDU_22" TargetState="PrepareResponse_23"/>
    <Transition SourceState="PrepareResponse_23" TargetState="WaitOnSPDU_24"/>
    <FSDeviceSend PDin="PD" PortNum="valid" DCount="5" SDset="1" DCommErr="0" DTimeout="0" CRC="valid"/>
    <FSDeviceReceive PDout="PD" PortNum="valid" MCount="3" setSD="0" ChFAckReq="0" CRC="valid"/>
    <Transition SourceState="WaitOnSPDU_24" TargetState="CheckSPDU_22"/>
    <Transition SourceState="CheckSPDU_22" TargetState="PrepareResponse_23"/>
    <Transition SourceState="PrepareResponse_23" TargetState="WaitOnSPDU_24"/>
    <FSDeviceSend PDin="PD" PortNum="valid" DCount="4" SDset="0" DCommErr="0" DTimeout="0" CRC="valid"/>
    <FSDeviceReceive PDout="PD" PortNum="valid" MCount="4" setSD="0" ChFAckReq="0" CRC="valid"/>
    <Transition SourceState="WaitOnSPDU_24" TargetState="CheckSPDU_22"/>
```

```
    <Transition SourceState="CheckSPDU_22" TargetState="PrepareResponse_23"/>
    <Transition SourceState="PrepareResponse_23" TargetState="WaitOnSPDU_24"/>
    <FSDeviceSend PDin="PD" PortNum="valid" DCount="3" SDset="0" DCommErr="0" DTimeout="0" CRC="valid"/>
    <FSDeviceReceive PDout="PD" PortNum="invalid" MCount="5" setSD="0" ChFAckReq="0" CRC="valid"/>
    <Transition SourceState="WaitOnSPDU_24" TargetState="PrepareResponse_25"/>
    <Transition SourceState="PrepareResponse_25" TargetState="WaitOnSPDU_26"/>
    <FSDeviceSend PDin="PD" PortNum="valid" DCount="2" SDset="1" DCommErr="1" DTimeout="0" CRC="valid"/>
  </FSDeviceSclTestCaseSteps>
</Testroot>
```

9.2.79 Test script 79

Table 133 defines the test conditions for this test case. The associated XML file contains steps and message parameters for the state flow check in case of setSD error, MCount = 0, and DCommErr.

Table 133 – FS-Device test script 79

TEST CASE ATTRIBUTES	IDENTIFICATION / REFERENCE
Identification (ID)	SDCI_FSTC_0130
Name	FSTCD_SCLD_FLOW_SETSD1MC0DCE1
Purpose (short)	
Equipment under test (EUT)	FS-Device
Test case version	1.0
Category / type	FS-Device automated SCL protocol test
Specification (clause)	[3] clause 11.3.3, Figure 37 (services); clause 11.5.3, Figure 42 (state chart)
Configuration / setup	See Table 54
TEST CASE	**CONDITIONS / PERFORMANCE**
Purpose (detailed)	Protocol flow in case of distinct error
Precondition	FS-Device waiting for the first message
Procedure	See XML file "IO-Link-Safety_spec_device_final_testsuite_testcase_79.xml"
Test parameter	See Table 54 and XML file
Post condition	–
TEST CASE RESULTS	**CHECK / REACTION**
Evaluation	Comparison of expected and received values according to the XML file
Test passed	Comparison OK
Test failed (examples)	Comparison not OK
Report	Printout of the automated SCL protocol tester <pass/fail>

Content of file "IO-Link-Safety_spec_device_final_testsuite_testcase_79.xml":

```
<?xml version="1.0" encoding="UTF-8"?>
<Testroot xsi:noNamespaceSchemaLocation="IO-Link-Safety-Test-Procedure_Types_V1.0.xsd"
xmlns:xsi="http://www.w3.org/2001/XMLSchema-instance" version="1.2" name="tc_79" date="20.11.2018: 14:01:13.951">
  <FSDeviceSclTestCaseSteps>
    <Transition SourceState="Init" TargetState="SystemStart_20"/>
    <Transition SourceState="SystemStart_20" TargetState="WaitOnSPDU_21"/>
    <FSDeviceReceive PDout="PD" PortNum="valid" MCount="0" setSD="1" ChFAckReq="0" CRC="valid"/>
    <Transition SourceState="WaitOnSPDU_21" TargetState="CheckSPDU_22"/>
    <Transition SourceState="CheckSPDU_22" TargetState="PrepareResponse_23"/>
    <Transition SourceState="PrepareResponse_23" TargetState="WaitOnSPDU_24"/>
    <FSDeviceSend PDin="PD" PortNum="valid" DCount="7" SDset="1" DCommErr="0" DTimeout="0" CRC="valid"/>
    <FSDeviceReceive PDout="PD" PortNum="valid" MCount="1" setSD="0" ChFAckReq="0" CRC="valid"/>
    <Transition SourceState="WaitOnSPDU_24" TargetState="CheckSPDU_22"/>
    <Transition SourceState="CheckSPDU_22" TargetState="PrepareResponse_23"/>
    <Transition SourceState="PrepareResponse_23" TargetState="WaitOnSPDU_24"/>
    <FSDeviceSend PDin="PD" PortNum="valid" DCount="6" SDset="1" DCommErr="0" DTimeout="0" CRC="valid"/>
    <FSDeviceReceive PDout="PD" PortNum="valid" MCount="2" setSD="0" ChFAckReq="0" CRC="valid"/>
    <Transition SourceState="WaitOnSPDU_24" TargetState="CheckSPDU_22"/>
    <Transition SourceState="CheckSPDU_22" TargetState="PrepareResponse_23"/>
    <Transition SourceState="PrepareResponse_23" TargetState="WaitOnSPDU_24"/>
    <FSDeviceSend PDin="PD" PortNum="valid" DCount="5" SDset="1" DCommErr="0" DTimeout="0" CRC="valid"/>
    <FSDeviceReceive PDout="PD" PortNum="valid" MCount="3" setSD="0" ChFAckReq="0" CRC="valid"/>
    <Transition SourceState="WaitOnSPDU_24" TargetState="CheckSPDU_22"/>
    <Transition SourceState="CheckSPDU_22" TargetState="PrepareResponse_23"/>
    <Transition SourceState="PrepareResponse_23" TargetState="WaitOnSPDU_24"/>
    <FSDeviceSend PDin="PD" PortNum="valid" DCount="4" SDset="0" DCommErr="0" DTimeout="0" CRC="valid"/>
    <FSDeviceReceive PDout="PD" PortNum="valid" MCount="4" setSD="0" ChFAckReq="0" CRC="valid"/>
    <Transition SourceState="WaitOnSPDU_24" TargetState="CheckSPDU_22"/>
```

```
    <Transition SourceState="CheckSPDU_22" TargetState="PrepareResponse_23"/>
    <Transition SourceState="PrepareResponse_23" TargetState="WaitOnSPDU_24"/>
    <FSDeviceSend PDin="PD" PortNum="valid" DCount="3" SDset="0" DCommErr="0" DTimeout="0" CRC="valid"/>
    <FSDeviceReceive PDout="PD" PortNum="valid" MCount="0" setSD="0" ChFAckReq="0" CRC="invalid"/>
    <Transition SourceState="WaitOnSPDU_24" TargetState="PrepareResponse_25"/>
    <Transition SourceState="PrepareResponse_25" TargetState="WaitOnSPDU_26"/>
    <FSDeviceSend PDin="PD" PortNum="valid" DCount="7" SDset="1" DCommErr="1" DTimeout="0" CRC="valid"/>
  </FSDeviceSclTestCaseSteps>
</Testroot>
```

9.2.80 Test script 80

Table 134 defines the test conditions for this test case. The associated XML file contains steps and message parameters for the state flow check in case of setSD error, MCount = 0, and DCommErr.

Table 134 – FS-Device test script 80

TEST CASE ATTRIBUTES	IDENTIFICATION / REFERENCE
Identification (ID)	SDCI_FSTC_0131
Name	FSTCD_SCLD_FLOW_SETSD1MC0DCE1
Purpose (short)	
Equipment under test (EUT)	FS-Device
Test case version	1.0
Category / type	FS-Device automated SCL protocol test
Specification (clause)	[3] clause 11.3.3, Figure 37 (services); clause 11.5.3, Figure 42 (state chart)
Configuration / setup	See Table 54

TEST CASE	CONDITIONS / PERFORMANCE
Purpose (detailed)	Protocol flow in case of distinct error
Precondition	FS-Device waiting for the first message
Procedure	See XML file "IO-Link-Safety_spec_device_final_testsuite_testcase_80.xml"
Test parameter	See Table 54 and XML file
Post condition	–

TEST CASE RESULTS	CHECK / REACTION
Evaluation	Comparison of expected and received values according to the XML file
Test passed	Comparison OK
Test failed (examples)	Comparison not OK
Report	Printout of the automated SCL protocol tester <pass/fail>

Content of file "IO-Link-Safety_spec_device_final_testsuite_testcase_80.xml":

```
<?xml version="1.0" encoding="UTF-8"?>
<Testroot xsi:noNamespaceSchemaLocation="IO-Link-Safety-Test-Procedure_Types_V1.0.xsd"
xmlns:xsi="http://www.w3.org/2001/XMLSchema-instance" version="1.2" name="tc_80" date="20.11.2018: 14:01:13.951">
  <FSDeviceSclTestCaseSteps>
    <Transition SourceState="Init" TargetState="SystemStart_20"/>
    <Transition SourceState="SystemStart_20" TargetState="WaitOnSPDU_21"/>
    <FSDeviceReceive PDout="PD" PortNum="valid" MCount="0" setSD="1" ChFAckReq="0" CRC="valid"/>
    <Transition SourceState="WaitOnSPDU_21" TargetState="CheckSPDU_22"/>
    <Transition SourceState="CheckSPDU_22" TargetState="PrepareResponse_23"/>
    <Transition SourceState="PrepareResponse_23" TargetState="WaitOnSPDU_24"/>
    <FSDeviceSend PDin="PD" PortNum="valid" DCount="7" SDset="1" DCommErr="0" DTimeout="0" CRC="valid"/>
    <FSDeviceReceive PDout="PD" PortNum="valid" MCount="1" setSD="0" ChFAckReq="0" CRC="valid"/>
    <Transition SourceState="WaitOnSPDU_24" TargetState="CheckSPDU_22"/>
    <Transition SourceState="CheckSPDU_22" TargetState="PrepareResponse_23"/>
    <Transition SourceState="PrepareResponse_23" TargetState="WaitOnSPDU_24"/>
    <FSDeviceSend PDin="PD" PortNum="valid" DCount="6" SDset="1" DCommErr="0" DTimeout="0" CRC="valid"/>
    <FSDeviceReceive PDout="PD" PortNum="valid" MCount="2" setSD="0" ChFAckReq="0" CRC="valid"/>
    <Transition SourceState="WaitOnSPDU_24" TargetState="CheckSPDU_22"/>
    <Transition SourceState="CheckSPDU_22" TargetState="PrepareResponse_23"/>
    <Transition SourceState="PrepareResponse_23" TargetState="WaitOnSPDU_24"/>
    <FSDeviceSend PDin="PD" PortNum="valid" DCount="5" SDset="1" DCommErr="0" DTimeout="0" CRC="valid"/>
    <FSDeviceReceive PDout="PD" PortNum="valid" MCount="3" setSD="0" ChFAckReq="0" CRC="valid"/>
    <Transition SourceState="WaitOnSPDU_24" TargetState="CheckSPDU_22"/>
    <Transition SourceState="CheckSPDU_22" TargetState="PrepareResponse_23"/>
    <Transition SourceState="PrepareResponse_23" TargetState="WaitOnSPDU_24"/>
    <FSDeviceSend PDin="PD" PortNum="valid" DCount="4" SDset="0" DCommErr="0" DTimeout="0" CRC="valid"/>
    <FSDeviceReceive PDout="PD" PortNum="valid" MCount="4" setSD="0" ChFAckReq="0" CRC="valid"/>
    <Transition SourceState="WaitOnSPDU_24" TargetState="CheckSPDU_22"/>
```

```
    <Transition SourceState="CheckSPDU_22" TargetState="PrepareResponse_23"/>
    <Transition SourceState="PrepareResponse_23" TargetState="WaitOnSPDU_24"/>
    <FSDeviceSend PDin="PD" PortNum="valid" DCount="3" SDset="0" DCommErr="0" DTimeout="0" CRC="valid"/>
    <FSDeviceReceive PDout="PD" PortNum="valid" MCount="5" setSD="0" ChFAckReq="0" CRC="invalid"/>
    <Transition SourceState="WaitOnSPDU_24" TargetState="PrepareResponse_25"/>
    <Transition SourceState="PrepareResponse_25" TargetState="WaitOnSPDU_26"/>
    <FSDeviceSend PDin="PD" PortNum="valid" DCount="2" SDset="1" DCommErr="1" DTimeout="0" CRC="valid"/>
  </FSDeviceSclTestCaseSteps>
</Testroot>
```

9.2.81 Test script 81

Table 135 defines the test conditions for this test case. The associated XML file contains steps and message parameters for the state flow check in case of no error, MCount = 1, and Timeout.

Table 135 – FS-Device test script 81

TEST CASE ATTRIBUTES	IDENTIFICATION / REFERENCE
Identification (ID)	SDCI_FSTC_0132
Name	FSTCD_SCLD_FLOW_SETSD0MC1TO
Purpose (short)	
Equipment under test (EUT)	FS-Device
Test case version	1.0
Category / type	FS-Device automated SCL protocol test
Specification (clause)	[3] clause 11.3.3, Figure 37 (services); clause 11.5.3, Figure 42 (state chart)
Configuration / setup	See Table 54
TEST CASE	**CONDITIONS / PERFORMANCE**
Purpose (detailed)	Protocol flow in case of distinct error
Precondition	FS-Device waiting for the first message
Procedure	See XML file "IO-Link-Safety_spec_device_final_testsuite_testcase_81.xml"
Test parameter	See Table 54 and XML file
Post condition	–
TEST CASE RESULTS	**CHECK / REACTION**
Evaluation	Comparison of expected and received values according to the XML file
Test passed	Comparison OK
Test failed (examples)	Comparison not OK
Report	Printout of the automated SCL protocol tester <pass/fail>

Content of file "IO-Link-Safety_spec_device_final_testsuite_testcase_81.xml":


```xml
<?xml version="1.0" encoding="UTF-8"?>
<Testroot xsi:noNamespaceSchemaLocation="IO-Link-Safety-Test-Procedure_Types_V1.0.xsd"
xmlns:xsi="http://www.w3.org/2001/XMLSchema-instance" version="1.2" name="tc_81" date="20.11.2018: 14:01:13.951">
  <FSDeviceSclTestCaseSteps>
    <Transition SourceState="Init" TargetState="SystemStart_20"/>
    <Transition SourceState="SystemStart_20" TargetState="WaitOnSPDU_21"/>
    <FSDeviceReceive PDout="PD" PortNum="valid" MCount="1" setSD="0" ChFAckReq="0" CRC="valid"/>
    <Transition SourceState="WaitOnSPDU_21" TargetState="CheckSPDU_22"/>
    <Transition SourceState="CheckSPDU_22" TargetState="PrepareResponse_25"/>
    <Transition SourceState="PrepareResponse_25" TargetState="WaitOnSPDU_26"/>
    <FSDeviceSend PDin="PD" PortNum="valid" DCount="6" SDset="1" DCommErr="1" DTimeout="1" CRC="valid"/>
    <FSDeviceReceive PDout="PD" PortNum="valid" MCount="2" setSD="0" ChFAckReq="0" CRC="valid"/>
    <Transition SourceState="WaitOnSPDU_26" TargetState="CheckSPDU_27"/>
    <Transition SourceState="CheckSPDU_27" TargetState="PrepareResponse_25"/>
    <Transition SourceState="PrepareResponse_25" TargetState="WaitOnSPDU_26"/>
    <FSDeviceSend PDin="PD" PortNum="valid" DCount="5" SDset="1" DCommErr="1" DTimeout="0" CRC="valid"/>
    <FSDeviceReceive PDout="PD" PortNum="valid" MCount="3" setSD="0" ChFAckReq="0" CRC="valid"/>
    <Transition SourceState="WaitOnSPDU_26" TargetState="CheckSPDU_27"/>
    <Transition SourceState="CheckSPDU_27" TargetState="PrepareResponse_25"/>
    <Transition SourceState="PrepareResponse_25" TargetState="WaitOnSPDU_26"/>
    <FSDeviceSend PDin="PD" PortNum="valid" DCount="4" SDset="1" DCommErr="0" DTimeout="0" CRC="valid"/>
    <FSDeviceReceive PDout="PD" PortNum="valid" MCount="4" setSD="0" ChFAckReq="0" CRC="valid"/>
    <Transition SourceState="WaitOnSPDU_26" TargetState="CheckSPDU_27"/>
    <Transition SourceState="CheckSPDU_27" TargetState="PrepareResponse_25"/>
    <Transition SourceState="PrepareResponse_25" TargetState="WaitOnSPDU_26"/>
    <FSDeviceSend PDin="PD" PortNum="valid" DCount="3" SDset="1" DCommErr="0" DTimeout="0" CRC="valid"/>
    <FSDeviceReceive PDout="PD" PortNum="valid" MCount="5" setSD="0" ChFAckReq="0" CRC="valid"/>
    <Transition SourceState="WaitOnSPDU_26" TargetState="CheckSPDU_27"/>
    <Transition SourceState="CheckSPDU_27" TargetState="PrepareResponse_23"/>
```

```
    <Transition SourceState="PrepareResponse_23" TargetState="WaitOnSPDU_24"/>
    <FSDeviceSend PDin="PD" PortNum="valid" DCount="2" SDset="0" DCommErr="0" DTimeout="0" CRC="valid"/>
    <FSDeviceReceive PDout="PD" PortNum="valid" MCount="5" setSD="0" ChFAckReq="0" CRC="valid"/>
    <Transition SourceState="WaitOnSPDU_24" TargetState="WaitOnSPDU_24"/>
  </FSDeviceSclTestCaseSteps>
</Testroot>
```

9.2.82 Test script 82

Table 136 defines the test conditions for this test case. The associated XML file contains steps and message parameters for the state flow check in case of no error, MCount = 1, and Timeout.

Table 136 – FS-Device test script 82

TEST CASE ATTRIBUTES	IDENTIFICATION / REFERENCE
Identification (ID)	SDCI_FSTC_0133
Name	FSTCD_SCLD_FLOW_SETSD0MC1TO
Purpose (short)	
Equipment under test (EUT)	FS-Device
Test case version	1.0
Category / type	FS-Device automated SCL protocol test
Specification (clause)	[3] clause 11.3.3, Figure 37 (services); clause 11.5.3, Figure 42 (state chart)
Configuration / setup	See Table 54
TEST CASE	**CONDITIONS / PERFORMANCE**
Purpose (detailed)	Protocol flow in case of distinct error
Precondition	FS-Device waiting for the first message
Procedure	See XML file "IO-Link-Safety_spec_device_final_testsuite_testcase_82.xml"
Test parameter	See Table 54 and XML file
Post condition	–
TEST CASE RESULTS	**CHECK / REACTION**
Evaluation	Comparison of expected and received values according to the XML file
Test passed	Comparison OK
Test failed (examples)	Comparison not OK
Report	Printout of the automated SCL protocol tester <pass/fail>

Content of file "IO-Link-Safety_spec_device_final_testsuite_testcase_82.xml":


```xml
<?xml version="1.0" encoding="UTF-8"?>
<Testroot xsi:noNamespaceSchemaLocation="IO-Link-Safety-Test-Procedure_Types_V1.0.xsd"
xmlns:xsi="http://www.w3.org/2001/XMLSchema-instance" version="1.2" name="tc_82" date="20.11.2018: 14:01:13.951">
  <FSDeviceSclTestCaseSteps>
    <Transition SourceState="Init" TargetState="SystemStart_20"/>
    <Transition SourceState="SystemStart_20" TargetState="WaitOnSPDU_21"/>
    <FSDeviceReceive PDout="PD" PortNum="valid" MCount="1" setSD="0" ChFAckReq="0" CRC="valid"/>
    <Transition SourceState="WaitOnSPDU_21" TargetState="CheckSPDU_22"/>
    <Transition SourceState="CheckSPDU_22" TargetState="PrepareResponse_25"/>
    <Transition SourceState="PrepareResponse_25" TargetState="WaitOnSPDU_26"/>
    <FSDeviceSend PDin="PD" PortNum="valid" DCount="6" SDset="1" DCommErr="1" DTimeout="1" CRC="valid"/>
    <FSDeviceReceive PDout="PD" PortNum="valid" MCount="2" setSD="0" ChFAckReq="0" CRC="valid"/>
    <Transition SourceState="WaitOnSPDU_26" TargetState="CheckSPDU_27"/>
    <Transition SourceState="CheckSPDU_27" TargetState="PrepareResponse_25"/>
    <Transition SourceState="PrepareResponse_25" TargetState="WaitOnSPDU_26"/>
    <FSDeviceSend PDin="PD" PortNum="valid" DCount="5" SDset="1" DCommErr="1" DTimeout="0" CRC="valid"/>
    <FSDeviceReceive PDout="PD" PortNum="valid" MCount="3" setSD="0" ChFAckReq="0" CRC="valid"/>
    <Transition SourceState="WaitOnSPDU_26" TargetState="CheckSPDU_27"/>
    <Transition SourceState="CheckSPDU_27" TargetState="PrepareResponse_25"/>
    <Transition SourceState="PrepareResponse_25" TargetState="WaitOnSPDU_26"/>
    <FSDeviceSend PDin="PD" PortNum="valid" DCount="4" SDset="1" DCommErr="0" DTimeout="0" CRC="valid"/>
    <FSDeviceReceive PDout="PD" PortNum="valid" MCount="4" setSD="0" ChFAckReq="0" CRC="valid"/>
    <Transition SourceState="WaitOnSPDU_26" TargetState="CheckSPDU_27"/>
    <Transition SourceState="CheckSPDU_27" TargetState="PrepareResponse_25"/>
    <Transition SourceState="PrepareResponse_25" TargetState="WaitOnSPDU_26"/>
    <FSDeviceSend PDin="PD" PortNum="valid" DCount="3" SDset="1" DCommErr="0" DTimeout="0" CRC="valid"/>
    <FSDeviceReceive PDout="PD" PortNum="valid" MCount="5" setSD="0" ChFAckReq="0" CRC="valid"/>
    <Transition SourceState="WaitOnSPDU_26" TargetState="CheckSPDU_27"/>
    <Transition SourceState="CheckSPDU_27" TargetState="PrepareResponse_23"/>
```

```
    <Transition SourceState="PrepareResponse_23" TargetState="WaitOnSPDU_24"/>
    <FSDeviceSend PDin="PD" PortNum="valid" DCount="2" SDset="0" DCommErr="0" DTimeout="0" CRC="valid"/>
    <FSDeviceReceive PDout="PD" PortNum="invalid" MCount="1" setSD="0" ChFAckReq="0" CRC="valid"/>
    <Transition SourceState="WaitOnSPDU_24" TargetState="PrepareResponse_25"/>
    <Transition SourceState="PrepareResponse_25" TargetState="WaitOnSPDU_26"/>
    <FSDeviceSend PDin="PD" PortNum="valid" DCount="6" SDset="1" DCommErr="1" DTimeout="0" CRC="valid"/>
  </FSDeviceSclTestCaseSteps>
</Testroot>
```

9.2.83 Test script 83

Table 137 defines the test conditions for this test case. The associated XML file contains steps and message parameters for the state flow check in case of no error, MCount = 1, and Timeout.

Table 137 – FS-Device test script 83

TEST CASE ATTRIBUTES	IDENTIFICATION / REFERENCE
Identification (ID)	SDCI_FSTC_0134
Name	FSTCD_SCLD_FLOW_SETSD0MC1TO
Purpose (short)	
Equipment under test (EUT)	FS-Device
Test case version	1.0
Category / type	FS-Device automated SCL protocol test
Specification (clause)	[3] clause 11.3.3, Figure 37 (services); clause 11.5.3, Figure 42 (state chart)
Configuration / setup	See Table 54
TEST CASE	**CONDITIONS / PERFORMANCE**
Purpose (detailed)	Protocol flow in case of distinct error
Precondition	FS-Device waiting for the first message
Procedure	See XML file "IO-Link-Safety_spec_device_final_testsuite_testcase_83.xml"
Test parameter	See Table 54 and XML file
Post condition	–
TEST CASE RESULTS	**CHECK / REACTION**
Evaluation	Comparison of expected and received values according to the XML file
Test passed	Comparison OK
Test failed (examples)	Comparison not OK
Report	Printout of the automated SCL protocol tester <pass/fail>

Content of file "IO-Link-Safety_spec_device_final_testsuite_testcase_83.xml":


```xml
<?xml version="1.0" encoding="UTF-8"?>
<Testroot xsi:noNamespaceSchemaLocation="IO-Link-Safety-Test-Procedure_Types_V1.0.xsd"
xmlns:xsi="http://www.w3.org/2001/XMLSchema-instance" version="1.2" name="tc_83" date="20.11.2018: 14:01:13.952">
  <FSDeviceSclTestCaseSteps>
    <Transition SourceState="Init" TargetState="SystemStart_20"/>
    <Transition SourceState="SystemStart_20" TargetState="WaitOnSPDU_21"/>
    <FSDeviceReceive PDout="PD" PortNum="valid" MCount="1" setSD="0" ChFAckReq="0" CRC="valid"/>
    <Transition SourceState="WaitOnSPDU_21" TargetState="CheckSPDU_22"/>
    <Transition SourceState="CheckSPDU_22" TargetState="PrepareResponse_25"/>
    <Transition SourceState="PrepareResponse_25" TargetState="WaitOnSPDU_26"/>
    <FSDeviceSend PDin="PD" PortNum="valid" DCount="6" SDset="1" DCommErr="1" DTimeout="1" CRC="valid"/>
    <FSDeviceReceive PDout="PD" PortNum="valid" MCount="2" setSD="0" ChFAckReq="0" CRC="valid"/>
    <Transition SourceState="WaitOnSPDU_26" TargetState="CheckSPDU_27"/>
    <Transition SourceState="CheckSPDU_27" TargetState="PrepareResponse_25"/>
    <Transition SourceState="PrepareResponse_25" TargetState="WaitOnSPDU_26"/>
    <FSDeviceSend PDin="PD" PortNum="valid" DCount="5" SDset="1" DCommErr="1" DTimeout="0" CRC="valid"/>
    <FSDeviceReceive PDout="PD" PortNum="valid" MCount="3" setSD="0" ChFAckReq="0" CRC="valid"/>
    <Transition SourceState="WaitOnSPDU_26" TargetState="CheckSPDU_27"/>
    <Transition SourceState="CheckSPDU_27" TargetState="PrepareResponse_25"/>
    <Transition SourceState="PrepareResponse_25" TargetState="WaitOnSPDU_26"/>
    <FSDeviceSend PDin="PD" PortNum="valid" DCount="4" SDset="1" DCommErr="0" DTimeout="0" CRC="valid"/>
    <FSDeviceReceive PDout="PD" PortNum="valid" MCount="4" setSD="0" ChFAckReq="0" CRC="valid"/>
    <Transition SourceState="WaitOnSPDU_26" TargetState="CheckSPDU_27"/>
    <Transition SourceState="CheckSPDU_27" TargetState="PrepareResponse_25"/>
    <Transition SourceState="PrepareResponse_25" TargetState="WaitOnSPDU_26"/>
    <FSDeviceSend PDin="PD" PortNum="valid" DCount="3" SDset="1" DCommErr="0" DTimeout="0" CRC="valid"/>
    <FSDeviceReceive PDout="PD" PortNum="valid" MCount="5" setSD="0" ChFAckReq="0" CRC="valid"/>
    <Transition SourceState="WaitOnSPDU_26" TargetState="CheckSPDU_27"/>
    <Transition SourceState="CheckSPDU_27" TargetState="PrepareResponse_23"/>
```

```
    <Transition SourceState="PrepareResponse_23" TargetState="WaitOnSPDU_24"/>
    <FSDeviceSend PDin="PD" PortNum="valid" DCount="2" SDset="0" DCommErr="0" DTimeout="0" CRC="valid"/>
    <FSDeviceReceive PDout="PD" PortNum="invalid" MCount="6" setSD="0" ChFAckReq="0" CRC="valid"/>
    <Transition SourceState="WaitOnSPDU_24" TargetState="PrepareResponse_25"/>
    <Transition SourceState="PrepareResponse_25" TargetState="WaitOnSPDU_26"/>
    <FSDeviceSend PDin="PD" PortNum="valid" DCount="1" SDset="1" DCommErr="1" DTimeout="0" CRC="valid"/>
  </FSDeviceSclTestCaseSteps>
</Testroot>
```

9.2.84 Test script 84

Table 138 defines the test conditions for this test case. The associated XML file contains steps and message parameters for the state flow check in case of no error, MCount = 2, and Timeout.

Table 138 – FS-Device test script 84

TEST CASE ATTRIBUTES	IDENTIFICATION / REFERENCE
Identification (ID)	SDCI_FSTC_0135
Name	FSTCD_SCLD_FLOW_SETSD0MC2TO
Purpose (short)	
Equipment under test (EUT)	FS-Device
Test case version	1.0
Category / type	FS-Device automated SCL protocol test
Specification (clause)	[3] clause 11.3.3, Figure 37 (services); clause 11.5.3, Figure 42 (state chart)
Configuration / setup	See Table 54
TEST CASE	**CONDITIONS / PERFORMANCE**
Purpose (detailed)	Protocol flow in case of distinct error
Precondition	FS-Device waiting for the first message
Procedure	See XML file "IO-Link-Safety_spec_device_final_testsuite_testcase_84.xml"
Test parameter	See Table 54 and XML file
Post condition	–
TEST CASE RESULTS	**CHECK / REACTION**
Evaluation	Comparison of expected and received values according to the XML file
Test passed	Comparison OK
Test failed (examples)	Comparison not OK
Report	Printout of the automated SCL protocol tester <pass/fail>

Content of file "IO-Link-Safety_spec_device_final_testsuite_testcase_84.xml":


```xml
<?xml version="1.0" encoding="UTF-8"?>
<Testroot xsi:noNamespaceSchemaLocation="IO-Link-Safety-Test-Procedure_Types_V1.0.xsd"
xmlns:xsi="http://www.w3.org/2001/XMLSchema-instance" version="1.2" name="tc_84" date="20.11.2018: 14:01:13.952">
  <FSDeviceSclTestCaseSteps>
    <Transition SourceState="Init" TargetState="SystemStart_20"/>
    <Transition SourceState="SystemStart_20" TargetState="WaitOnSPDU_21"/>
    <FSDeviceReceive PDout="PD" PortNum="valid" MCount="2" setSD="0" ChFAckReq="0" CRC="valid"/>
    <Transition SourceState="WaitOnSPDU_21" TargetState="CheckSPDU_22"/>
    <Transition SourceState="CheckSPDU_22" TargetState="PrepareResponse_25"/>
    <Transition SourceState="PrepareResponse_25" TargetState="WaitOnSPDU_26"/>
    <FSDeviceSend PDin="PD" PortNum="valid" DCount="5" SDset="1" DCommErr="1" DTimeout="1" CRC="valid"/>
    <FSDeviceReceive PDout="PD" PortNum="valid" MCount="3" setSD="0" ChFAckReq="0" CRC="valid"/>
    <Transition SourceState="WaitOnSPDU_26" TargetState="CheckSPDU_27"/>
    <Transition SourceState="CheckSPDU_27" TargetState="PrepareResponse_25"/>
    <Transition SourceState="PrepareResponse_25" TargetState="WaitOnSPDU_26"/>
    <FSDeviceSend PDin="PD" PortNum="valid" DCount="4" SDset="1" DCommErr="1" DTimeout="0" CRC="valid"/>
    <FSDeviceReceive PDout="PD" PortNum="valid" MCount="4" setSD="0" ChFAckReq="0" CRC="valid"/>
    <Transition SourceState="WaitOnSPDU_26" TargetState="CheckSPDU_27"/>
    <Transition SourceState="CheckSPDU_27" TargetState="PrepareResponse_25"/>
    <Transition SourceState="PrepareResponse_25" TargetState="WaitOnSPDU_26"/>
    <FSDeviceSend PDin="PD" PortNum="valid" DCount="3" SDset="1" DCommErr="0" DTimeout="0" CRC="valid"/>
    <FSDeviceReceive PDout="PD" PortNum="valid" MCount="5" setSD="0" ChFAckReq="0" CRC="valid"/>
    <Transition SourceState="WaitOnSPDU_26" TargetState="CheckSPDU_27"/>
    <Transition SourceState="CheckSPDU_27" TargetState="PrepareResponse_25"/>
    <Transition SourceState="PrepareResponse_25" TargetState="WaitOnSPDU_26"/>
    <FSDeviceSend PDin="PD" PortNum="valid" DCount="2" SDset="1" DCommErr="0" DTimeout="0" CRC="valid"/>
    <FSDeviceReceive PDout="PD" PortNum="valid" MCount="6" setSD="0" ChFAckReq="0" CRC="valid"/>
    <Transition SourceState="WaitOnSPDU_26" TargetState="CheckSPDU_27"/>
    <Transition SourceState="CheckSPDU_27" TargetState="PrepareResponse_23"/>
```

```
    <Transition SourceState="PrepareResponse_23" TargetState="WaitOnSPDU_24"/>
    <FSDeviceSend PDin="PD" PortNum="valid" DCount="1" SDset="0" DCommErr="0" DTimeout="0" CRC="valid"/>
    <FSDeviceReceive PDout="PD" PortNum="valid" MCount="6" setSD="0" ChFAckReq="0" CRC="valid"/>
    <Transition SourceState="WaitOnSPDU_24" TargetState="WaitOnSPDU_24"/>
  </FSDeviceSclTestCaseSteps>
</Testroot>
```

9.2.85 Test script 85

Table 139 defines the test conditions for this test case. The associated XML file contains steps and message parameters for the state flow check in case of no error, MCount = 2, and Timeout.

Table 139 – FS-Device test script 85

TEST CASE ATTRIBUTES	IDENTIFICATION / REFERENCE
Identification (ID)	SDCI_FSTC_0136
Name	FSTCD_SCLD_FLOW_SETSD0MC2TO
Purpose (short)	
Equipment under test (EUT)	FS-Device
Test case version	1.0
Category / type	FS-Device automated SCL protocol test
Specification (clause)	[3] clause 11.3.3, Figure 37 (services); clause 11.5.3, Figure 42 (state chart)
Configuration / setup	See Table 54
TEST CASE	**CONDITIONS / PERFORMANCE**
Purpose (detailed)	Protocol flow in case of distinct error
Precondition	FS-Device waiting for the first message
Procedure	See XML file "IO-Link-Safety_spec_device_final_testsuite_testcase_85.xml"
Test parameter	See Table 54 and XML file
Post condition	–
TEST CASE RESULTS	**CHECK / REACTION**
Evaluation	Comparison of expected and received values according to the XML file
Test passed	Comparison OK
Test failed (examples)	Comparison not OK
Report	Printout of the automated SCL protocol tester <pass/fail>

Content of file "IO-Link-Safety_spec_device_final_testsuite_testcase_85.xml":


```xml
<?xml version="1.0" encoding="UTF-8"?>
<Testroot xsi:noNamespaceSchemaLocation="IO-Link-Safety-Test-Procedure_Types_V1.0.xsd"
xmlns:xsi="http://www.w3.org/2001/XMLSchema-instance" version="1.2" name="tc_85" date="20.11.2018: 14:01:13.952">
  <FSDeviceSclTestCaseSteps>
    <Transition SourceState="Init" TargetState="SystemStart_20"/>
    <Transition SourceState="SystemStart_20" TargetState="WaitOnSPDU_21"/>
    <FSDeviceReceive PDout="PD" PortNum="valid" MCount="2" setSD="0" ChFAckReq="0" CRC="valid"/>
    <Transition SourceState="WaitOnSPDU_21" TargetState="CheckSPDU_22"/>
    <Transition SourceState="CheckSPDU_22" TargetState="PrepareResponse_25"/>
    <Transition SourceState="PrepareResponse_25" TargetState="WaitOnSPDU_26"/>
    <FSDeviceSend PDin="PD" PortNum="valid" DCount="5" SDset="1" DCommErr="1" DTimeout="1" CRC="valid"/>
    <FSDeviceReceive PDout="PD" PortNum="valid" MCount="3" setSD="0" ChFAckReq="0" CRC="valid"/>
    <Transition SourceState="WaitOnSPDU_26" TargetState="CheckSPDU_27"/>
    <Transition SourceState="CheckSPDU_27" TargetState="PrepareResponse_25"/>
    <Transition SourceState="PrepareResponse_25" TargetState="WaitOnSPDU_26"/>
    <FSDeviceSend PDin="PD" PortNum="valid" DCount="4" SDset="1" DCommErr="1" DTimeout="0" CRC="valid"/>
    <FSDeviceReceive PDout="PD" PortNum="valid" MCount="4" setSD="0" ChFAckReq="0" CRC="valid"/>
    <Transition SourceState="WaitOnSPDU_26" TargetState="CheckSPDU_27"/>
    <Transition SourceState="CheckSPDU_27" TargetState="PrepareResponse_25"/>
    <Transition SourceState="PrepareResponse_25" TargetState="WaitOnSPDU_26"/>
    <FSDeviceSend PDin="PD" PortNum="valid" DCount="3" SDset="1" DCommErr="0" DTimeout="0" CRC="valid"/>
    <FSDeviceReceive PDout="PD" PortNum="valid" MCount="5" setSD="0" ChFAckReq="0" CRC="valid"/>
    <Transition SourceState="WaitOnSPDU_26" TargetState="CheckSPDU_27"/>
    <Transition SourceState="CheckSPDU_27" TargetState="PrepareResponse_25"/>
    <Transition SourceState="PrepareResponse_25" TargetState="WaitOnSPDU_26"/>
    <FSDeviceSend PDin="PD" PortNum="valid" DCount="2" SDset="1" DCommErr="0" DTimeout="0" CRC="valid"/>
    <FSDeviceReceive PDout="PD" PortNum="valid" MCount="6" setSD="0" ChFAckReq="0" CRC="valid"/>
    <Transition SourceState="WaitOnSPDU_26" TargetState="CheckSPDU_27"/>
    <Transition SourceState="CheckSPDU_27" TargetState="PrepareResponse_23"/>
```

```
    <Transition SourceState="PrepareResponse_23" TargetState="WaitOnSPDU_24"/>
    <FSDeviceSend PDin="PD" PortNum="valid" DCount="1" SDset="0" DCommErr="0" DTimeout="0" CRC="valid"/>
    <FSDeviceReceive PDout="PD" PortNum="invalid" MCount="1" setSD="0" ChFAckReq="0" CRC="valid"/>
    <Transition SourceState="WaitOnSPDU_24" TargetState="PrepareResponse_25"/>
    <Transition SourceState="PrepareResponse_25" TargetState="WaitOnSPDU_26"/>
    <FSDeviceSend PDin="PD" PortNum="valid" DCount="6" SDset="1" DCommErr="1" DTimeout="0" CRC="valid"/>
  </FSDeviceSclTestCaseSteps>
</Testroot>
```

9.2.86 Test script 86

Table 140 defines the test conditions for this test case. The associated XML file contains steps and message parameters for the state flow check in case of no error, MCount = 2, and Timeout.

Table 140 – FS-Device test script 86

TEST CASE ATTRIBUTES	IDENTIFICATION / REFERENCE
Identification (ID)	SDCI_FSTC_0137
Name	FSTCD_SCLD_FLOW_SETSD0MC2TO
Purpose (short)	
Equipment under test (EUT)	FS-Device
Test case version	1.0
Category / type	FS-Device automated SCL protocol test
Specification (clause)	[3] clause 11.3.3, Figure 37 (services); clause 11.5.3, Figure 42 (state chart)
Configuration / setup	See Table 54
TEST CASE	**CONDITIONS / PERFORMANCE**
Purpose (detailed)	Protocol flow in case of distinct error
Precondition	FS-Device waiting for the first message
Procedure	See XML file "IO-Link-Safety_spec_device_final_testsuite_testcase_86.xml"
Test parameter	See Table 54 and XML file
Post condition	–
TEST CASE RESULTS	**CHECK / REACTION**
Evaluation	Comparison of expected and received values according to the XML file
Test passed	Comparison OK
Test failed (examples)	Comparison not OK
Report	Printout of the automated SCL protocol tester <pass/fail>

Content of file "IO-Link-Safety_spec_device_final_testsuite_testcase_86.xml":


```xml
<?xml version="1.0" encoding="UTF-8"?>
<Testroot xsi:noNamespaceSchemaLocation="IO-Link-Safety-Test-Procedure_Types_V1.0.xsd"
xmlns:xsi="http://www.w3.org/2001/XMLSchema-instance" version="1.2" name="tc_86" date="20.11.2018: 14:01:13.952">
  <FSDeviceSclTestCaseSteps>
    <Transition SourceState="Init" TargetState="SystemStart_20"/>
    <Transition SourceState="SystemStart_20" TargetState="WaitOnSPDU_21"/>
    <FSDeviceReceive PDout="PD" PortNum="valid" MCount="2" setSD="0" ChFAckReq="0" CRC="valid"/>
    <Transition SourceState="WaitOnSPDU_21" TargetState="CheckSPDU_22"/>
    <Transition SourceState="CheckSPDU_22" TargetState="PrepareResponse_25"/>
    <Transition SourceState="PrepareResponse_25" TargetState="WaitOnSPDU_26"/>
    <FSDeviceSend PDin="PD" PortNum="valid" DCount="5" SDset="1" DCommErr="1" DTimeout="1" CRC="valid"/>
    <FSDeviceReceive PDout="PD" PortNum="valid" MCount="3" setSD="0" ChFAckReq="0" CRC="valid"/>
    <Transition SourceState="WaitOnSPDU_26" TargetState="CheckSPDU_27"/>
    <Transition SourceState="CheckSPDU_27" TargetState="PrepareResponse_25"/>
    <Transition SourceState="PrepareResponse_25" TargetState="WaitOnSPDU_26"/>
    <FSDeviceSend PDin="PD" PortNum="valid" DCount="4" SDset="1" DCommErr="1" DTimeout="0" CRC="valid"/>
    <FSDeviceReceive PDout="PD" PortNum="valid" MCount="4" setSD="0" ChFAckReq="0" CRC="valid"/>
    <Transition SourceState="WaitOnSPDU_26" TargetState="CheckSPDU_27"/>
    <Transition SourceState="CheckSPDU_27" TargetState="PrepareResponse_25"/>
    <Transition SourceState="PrepareResponse_25" TargetState="WaitOnSPDU_26"/>
    <FSDeviceSend PDin="PD" PortNum="valid" DCount="3" SDset="1" DCommErr="0" DTimeout="0" CRC="valid"/>
    <FSDeviceReceive PDout="PD" PortNum="valid" MCount="5" setSD="0" ChFAckReq="0" CRC="valid"/>
    <Transition SourceState="WaitOnSPDU_26" TargetState="CheckSPDU_27"/>
    <Transition SourceState="CheckSPDU_27" TargetState="PrepareResponse_25"/>
    <Transition SourceState="PrepareResponse_25" TargetState="WaitOnSPDU_26"/>
    <FSDeviceSend PDin="PD" PortNum="valid" DCount="2" SDset="1" DCommErr="0" DTimeout="0" CRC="valid"/>
    <FSDeviceReceive PDout="PD" PortNum="valid" MCount="6" setSD="0" ChFAckReq="0" CRC="valid"/>
    <Transition SourceState="WaitOnSPDU_26" TargetState="CheckSPDU_27"/>
    <Transition SourceState="CheckSPDU_27" TargetState="PrepareResponse_23"/>
```

```
    <Transition SourceState="PrepareResponse_23" TargetState="WaitOnSPDU_24"/>
    <FSDeviceSend PDin="PD" PortNum="valid" DCount="1" SDset="0" DCommErr="0" DTimeout="0" CRC="valid"/>
    <FSDeviceReceive PDout="PD" PortNum="invalid" MCount="7" setSD="0" ChFAckReq="0" CRC="valid"/>
    <Transition SourceState="WaitOnSPDU_24" TargetState="PrepareResponse_25"/>
    <Transition SourceState="PrepareResponse_25" TargetState="WaitOnSPDU_26"/>
    <FSDeviceSend PDin="PD" PortNum="valid" DCount="0" SDset="1" DCommErr="1" DTimeout="0" CRC="valid"/>
  </FSDeviceSclTestCaseSteps>
</Testroot>
```

9.2.87 Test script 87

Table 141 defines the test conditions for this test case. The associated XML file contains steps and message parameters for the state flow check in case of no error, MCount = 3, and Timeout.

Table 141 – FS-Device test script 87

TEST CASE ATTRIBUTES	IDENTIFICATION / REFERENCE
Identification (ID)	SDCI_FSTC_0138
Name	FSTCD_SCLD_FLOW_SETSD0MC3TO
Purpose (short)	
Equipment under test (EUT)	FS-Device
Test case version	1.0
Category / type	FS-Device automated SCL protocol test
Specification (clause)	[3] clause 11.3.3, Figure 37 (services); clause 11.5.3, Figure 42 (state chart)
Configuration / setup	See Table 54
TEST CASE	**CONDITIONS / PERFORMANCE**
Purpose (detailed)	Protocol flow in case of distinct error
Precondition	FS-Device waiting for the first message
Procedure	See XML file "IO-Link-Safety_spec_device_final_testsuite_testcase_87.xml"
Test parameter	See Table 54 and XML file
Post condition	–
TEST CASE RESULTS	**CHECK / REACTION**
Evaluation	Comparison of expected and received values according to the XML file
Test passed	Comparison OK
Test failed (examples)	Comparison not OK
Report	Printout of the automated SCL protocol tester <pass/fail>

Content of file "IO-Link-Safety_spec_device_final_testsuite_testcase_87.xml":


```xml
<?xml version="1.0" encoding="UTF-8"?>
<Testroot xsi:noNamespaceSchemaLocation="IO-Link-Safety-Test-Procedure_Types_V1.0.xsd"
xmlns:xsi="http://www.w3.org/2001/XMLSchema-instance" version="1.2" name="tc_87" date="20.11.2018: 14:01:13.952">
  <FSDeviceSclTestCaseSteps>
    <Transition SourceState="Init" TargetState="SystemStart_20"/>
    <Transition SourceState="SystemStart_20" TargetState="WaitOnSPDU_21"/>
    <FSDeviceReceive PDout="PD" PortNum="valid" MCount="3" setSD="0" ChFAckReq="0" CRC="valid"/>
    <Transition SourceState="WaitOnSPDU_21" TargetState="CheckSPDU_22"/>
    <Transition SourceState="CheckSPDU_22" TargetState="PrepareResponse_25"/>
    <Transition SourceState="PrepareResponse_25" TargetState="WaitOnSPDU_26"/>
    <FSDeviceSend PDin="PD" PortNum="valid" DCount="4" SDset="1" DCommErr="1" DTimeout="1" CRC="valid"/>
    <FSDeviceReceive PDout="PD" PortNum="valid" MCount="4" setSD="0" ChFAckReq="0" CRC="valid"/>
    <Transition SourceState="WaitOnSPDU_26" TargetState="CheckSPDU_27"/>
    <Transition SourceState="CheckSPDU_27" TargetState="PrepareResponse_25"/>
    <Transition SourceState="PrepareResponse_25" TargetState="WaitOnSPDU_26"/>
    <FSDeviceSend PDin="PD" PortNum="valid" DCount="3" SDset="1" DCommErr="1" DTimeout="0" CRC="valid"/>
    <FSDeviceReceive PDout="PD" PortNum="valid" MCount="5" setSD="0" ChFAckReq="0" CRC="valid"/>
    <Transition SourceState="WaitOnSPDU_26" TargetState="CheckSPDU_27"/>
    <Transition SourceState="CheckSPDU_27" TargetState="PrepareResponse_25"/>
    <Transition SourceState="PrepareResponse_25" TargetState="WaitOnSPDU_26"/>
    <FSDeviceSend PDin="PD" PortNum="valid" DCount="2" SDset="1" DCommErr="0" DTimeout="0" CRC="valid"/>
    <FSDeviceReceive PDout="PD" PortNum="valid" MCount="6" setSD="0" ChFAckReq="0" CRC="valid"/>
    <Transition SourceState="WaitOnSPDU_26" TargetState="CheckSPDU_27"/>
    <Transition SourceState="CheckSPDU_27" TargetState="PrepareResponse_25"/>
    <Transition SourceState="PrepareResponse_25" TargetState="WaitOnSPDU_26"/>
    <FSDeviceSend PDin="PD" PortNum="valid" DCount="1" SDset="1" DCommErr="0" DTimeout="0" CRC="valid"/>
    <FSDeviceReceive PDout="PD" PortNum="valid" MCount="7" setSD="0" ChFAckReq="0" CRC="valid"/>
    <Transition SourceState="WaitOnSPDU_26" TargetState="CheckSPDU_27"/>
    <Transition SourceState="CheckSPDU_27" TargetState="PrepareResponse_23"/>
```

```
    <Transition SourceState="PrepareResponse_23" TargetState="WaitOnSPDU_24"/>
    <FSDeviceSend PDin="PD" PortNum="valid" DCount="0" SDset="0" DCommErr="0" DTimeout="0" CRC="valid"/>
    <FSDeviceReceive PDout="PD" PortNum="valid" MCount="7" setSD="0" ChFAckReq="0" CRC="valid"/>
    <Transition SourceState="WaitOnSPDU_24" TargetState="WaitOnSPDU_24"/>
  </FSDeviceSclTestCaseSteps>
</Testroot>
```

9.2.88 Test script 88

Table 142 defines the test conditions for this test case. The associated XML file contains steps and message parameters for the state flow check in case of no error, MCount = 3, and Timeout.

Table 142 – FS-Device test script 88

TEST CASE ATTRIBUTES	IDENTIFICATION / REFERENCE
Identification (ID)	SDCI_FSTC_0139
Name	FSTCD_SCLD_FLOW_SETSD0MC3TO
Purpose (short)	
Equipment under test (EUT)	FS-Device
Test case version	1.0
Category / type	FS-Device automated SCL protocol test
Specification (clause)	[3] clause 11.3.3, Figure 37 (services); clause 11.5.3, Figure 42 (state chart)
Configuration / setup	See Table 54
TEST CASE	**CONDITIONS / PERFORMANCE**
Purpose (detailed)	Protocol flow in case of distinct error
Precondition	FS-Device waiting for the first message
Procedure	See XML file "IO-Link-Safety_spec_device_final_testsuite_testcase_88.xml"
Test parameter	See Table 54 and XML file
Post condition	–
TEST CASE RESULTS	**CHECK / REACTION**
Evaluation	Comparison of expected and received values according to the XML file
Test passed	Comparison OK
Test failed (examples)	Comparison not OK
Report	Printout of the automated SCL protocol tester <pass/fail>

Content of file "IO-Link-Safety_spec_device_final_testsuite_testcase_88.xml":

```
<?xml version="1.0" encoding="UTF-8"?>
<Testroot xsi:noNamespaceSchemaLocation="IO-Link-Safety-Test-Procedure_Types_V1.0.xsd"
xmlns:xsi="http://www.w3.org/2001/XMLSchema-instance" version="1.2" name="tc_88" date="20.11.2018: 14:01:13.953">
  <FSDeviceSclTestCaseSteps>
    <Transition SourceState="Init" TargetState="SystemStart_20"/>
    <Transition SourceState="SystemStart_20" TargetState="WaitOnSPDU_21"/>
    <FSDeviceReceive PDout="PD" PortNum="valid" MCount="3" setSD="0" ChFAckReq="0" CRC="valid"/>
    <Transition SourceState="WaitOnSPDU_21" TargetState="CheckSPDU_22"/>
    <Transition SourceState="CheckSPDU_22" TargetState="PrepareResponse_25"/>
    <Transition SourceState="PrepareResponse_25" TargetState="WaitOnSPDU_26"/>
    <FSDeviceSend PDin="PD" PortNum="valid" DCount="4" SDset="1" DCommErr="1" DTimeout="1" CRC="valid"/>
    <FSDeviceReceive PDout="PD" PortNum="valid" MCount="4" setSD="0" ChFAckReq="0" CRC="valid"/>
    <Transition SourceState="WaitOnSPDU_26" TargetState="CheckSPDU_27"/>
    <Transition SourceState="CheckSPDU_27" TargetState="PrepareResponse_25"/>
    <Transition SourceState="PrepareResponse_25" TargetState="WaitOnSPDU_26"/>
    <FSDeviceSend PDin="PD" PortNum="valid" DCount="3" SDset="1" DCommErr="1" DTimeout="0" CRC="valid"/>
    <FSDeviceReceive PDout="PD" PortNum="valid" MCount="5" setSD="0" ChFAckReq="0" CRC="valid"/>
    <Transition SourceState="WaitOnSPDU_26" TargetState="CheckSPDU_27"/>
    <Transition SourceState="CheckSPDU_27" TargetState="PrepareResponse_25"/>
    <Transition SourceState="PrepareResponse_25" TargetState="WaitOnSPDU_26"/>
    <FSDeviceSend PDin="PD" PortNum="valid" DCount="2" SDset="1" DCommErr="0" DTimeout="0" CRC="valid"/>
    <FSDeviceReceive PDout="PD" PortNum="valid" MCount="6" setSD="0" ChFAckReq="0" CRC="valid"/>
    <Transition SourceState="WaitOnSPDU_26" TargetState="CheckSPDU_27"/>
    <Transition SourceState="CheckSPDU_27" TargetState="PrepareResponse_25"/>
    <Transition SourceState="PrepareResponse_25" TargetState="WaitOnSPDU_26"/>
    <FSDeviceSend PDin="PD" PortNum="valid" DCount="1" SDset="1" DCommErr="0" DTimeout="0" CRC="valid"/>
    <FSDeviceReceive PDout="PD" PortNum="valid" MCount="7" setSD="0" ChFAckReq="0" CRC="valid"/>
    <Transition SourceState="WaitOnSPDU_26" TargetState="CheckSPDU_27"/>
    <Transition SourceState="CheckSPDU_27" TargetState="PrepareResponse_23"/>
```

```
    <Transition SourceState="PrepareResponse_23" TargetState="WaitOnSPDU_24"/>
    <FSDeviceSend PDin="PD" PortNum="valid" DCount="0" SDset="0" DCommErr="0" DTimeout="0" CRC="valid"/>
    <FSDeviceReceive PDout="PD" PortNum="invalid" MCount="1" setSD="0" ChFAckReq="0" CRC="valid"/>
    <Transition SourceState="WaitOnSPDU_24" TargetState="PrepareResponse_25"/>
    <Transition SourceState="PrepareResponse_25" TargetState="WaitOnSPDU_26"/>
    <FSDeviceSend PDin="PD" PortNum="valid" DCount="6" SDset="1" DCommErr="1" DTimeout="0" CRC="valid"/>
  </FSDeviceSclTestCaseSteps>
</Testroot>
```

9.2.89 Test script 89

Table 143 defines the test conditions for this test case. The associated XML file contains steps and message parameters for the state flow check in case of setSD error, MCount = 0, and DCommErr.

Table 143 – FS-Device test script 89

TEST CASE ATTRIBUTES	IDENTIFICATION / REFERENCE
Identification (ID)	SDCI_FSTC_0140
Name	FSTCD_SCLD_FLOW_SETSD1MC0DCE1
Purpose (short)	
Equipment under test (EUT)	FS-Device
Test case version	1.0
Category / type	FS-Device automated SCL protocol test
Specification (clause)	[3] clause 11.3.3, Figure 37 (services); clause 11.5.3, Figure 42 (state chart)
Configuration / setup	See Table 54
TEST CASE	**CONDITIONS / PERFORMANCE**
Purpose (detailed)	Protocol flow in case of distinct error
Precondition	FS-Device waiting for the first message
Procedure	See XML file "IO-Link-Safety_spec_device_final_testsuite_testcase_89.xml"
Test parameter	See Table 54 and XML file
Post condition	–
TEST CASE RESULTS	**CHECK / REACTION**
Evaluation	Comparison of expected and received values according to the XML file
Test passed	Comparison OK
Test failed (examples)	Comparison not OK
Report	Printout of the automated SCL protocol tester <pass/fail>

Content of file "IO-Link-Safety_spec_device_final_testsuite_testcase_89.xml":

```xml
<?xml version="1.0" encoding="UTF-8"?>
<Testroot xsi:noNamespaceSchemaLocation="IO-Link-Safety-Test-Procedure_Types_V1.0.xsd"
xmlns:xsi="http://www.w3.org/2001/XMLSchema-instance" version="1.2" name="tc_89" date="20.11.2018: 14:01:13.953">
  <FSDeviceSclTestCaseSteps>
    <Transition SourceState="Init" TargetState="SystemStart_20"/>
    <Transition SourceState="SystemStart_20" TargetState="WaitOnSPDU_21"/>
    <FSDeviceReceive PDout="PD" PortNum="valid" MCount="0" setSD="1" ChFAckReq="0" CRC="valid"/>
    <Transition SourceState="WaitOnSPDU_21" TargetState="CheckSPDU_22"/>
    <Transition SourceState="CheckSPDU_22" TargetState="PrepareResponse_23"/>
    <Transition SourceState="PrepareResponse_23" TargetState="WaitOnSPDU_24"/>
    <FSDeviceSend PDin="PD" PortNum="valid" DCount="7" SDset="1" DCommErr="0" DTimeout="0" CRC="valid"/>
    <FSDeviceReceive PDout="PD" PortNum="valid" MCount="1" setSD="0" ChFAckReq="0" CRC="valid"/>
    <Transition SourceState="WaitOnSPDU_24" TargetState="CheckSPDU_22"/>
    <Transition SourceState="CheckSPDU_22" TargetState="PrepareResponse_23"/>
    <Transition SourceState="PrepareResponse_23" TargetState="WaitOnSPDU_24"/>
    <FSDeviceSend PDin="PD" PortNum="valid" DCount="6" SDset="1" DCommErr="0" DTimeout="0" CRC="valid"/>
    <FSDeviceReceive PDout="PD" PortNum="valid" MCount="2" setSD="0" ChFAckReq="0" CRC="valid"/>
    <Transition SourceState="WaitOnSPDU_24" TargetState="CheckSPDU_22"/>
    <Transition SourceState="CheckSPDU_22" TargetState="PrepareResponse_23"/>
    <Transition SourceState="PrepareResponse_23" TargetState="WaitOnSPDU_24"/>
    <FSDeviceSend PDin="PD" PortNum="valid" DCount="5" SDset="1" DCommErr="0" DTimeout="0" CRC="valid"/>
    <FSDeviceReceive PDout="PD" PortNum="valid" MCount="3" setSD="0" ChFAckReq="0" CRC="valid"/>
    <Transition SourceState="WaitOnSPDU_24" TargetState="CheckSPDU_22"/>
    <Transition SourceState="CheckSPDU_22" TargetState="PrepareResponse_23"/>
    <Transition SourceState="PrepareResponse_23" TargetState="WaitOnSPDU_24"/>
    <FSDeviceSend PDin="PD" PortNum="valid" DCount="4" SDset="0" DCommErr="0" DTimeout="0" CRC="valid"/>
    <FSDeviceReceive PDout="PD" PortNum="valid" MCount="4" setSD="0" ChFAckReq="0" CRC="valid"/>
    <Transition SourceState="WaitOnSPDU_24" TargetState="CheckSPDU_22"/>
```

```
    <Transition SourceState="CheckSPDU_22" TargetState="PrepareResponse_23"/>
    <Transition SourceState="PrepareResponse_23" TargetState="WaitOnSPDU_24"/>
    <FSDeviceSend PDin="PD" PortNum="valid" DCount="3" SDset="0" DCommErr="0" DTimeout="0" CRC="valid"/>
    <FSDeviceReceive PDout="PD" PortNum="valid" MCount="6" setSD="0" ChFAckReq="0" CRC="valid"/>
    <Transition SourceState="WaitOnSPDU_24" TargetState="CheckSPDU_22"/>
    <Transition SourceState="CheckSPDU_22" TargetState="PrepareResponse_25"/>
    <Transition SourceState="PrepareResponse_25" TargetState="WaitOnSPDU_26"/>
    <FSDeviceSend PDin="PD" PortNum="valid" DCount="1" SDset="1" DCommErr="1" DTimeout="0" CRC="valid"/>
  </FSDeviceSclTestCaseSteps>
</Testroot>
```

9.2.90 Test script 90

Table 144 defines the test conditions for this test case. The associated XML file contains steps and message parameters for the state flow check in case of no error, MCount = 2, and Timeout.

Table 144 – FS-Device test script 90

TEST CASE ATTRIBUTES	IDENTIFICATION / REFERENCE
Identification (ID)	SDCI_FSTC_0141
Name	FSTCD_SCLD_FLOW_SETSD0MC2TO
Purpose (short)	
Equipment under test (EUT)	FS-Device
Test case version	1.0
Category / type	FS-Device automated SCL protocol test
Specification (clause)	[3] clause 11.3.3, Figure 37 (services); clause 11.5.3, Figure 42 (state chart)
Configuration / setup	See Table 54
TEST CASE	**CONDITIONS / PERFORMANCE**
Purpose (detailed)	Protocol flow in case of distinct error
Precondition	FS-Device waiting for the first message
Procedure	See XML file "IO-Link-Safety_spec_device_final_testsuite_testcase_90.xml"
Test parameter	See Table 54 and XML file
Post condition	–
TEST CASE RESULTS	**CHECK / REACTION**
Evaluation	Comparison of expected and received values according to the XML file
Test passed	Comparison OK
Test failed (examples)	Comparison not OK
Report	Printout of the automated SCL protocol tester <pass/fail>

Content of file "IO-Link-Safety_spec_device_final_testsuite_testcase_90.xml":


```xml
<?xml version="1.0" encoding="UTF-8"?>
<Testroot xsi:noNamespaceSchemaLocation="IO-Link-Safety-Test-Procedure_Types_V1.0.xsd"
xmlns:xsi="http://www.w3.org/2001/XMLSchema-instance" version="1.2" name="tc_90" date="20.11.2018: 14:01:13.953">
  <FSDeviceSclTestCaseSteps>
    <Transition SourceState="Init" TargetState="SystemStart_20"/>
    <Transition SourceState="SystemStart_20" TargetState="WaitOnSPDU_21"/>
    <FSDeviceReceive PDout="PD" PortNum="valid" MCount="2" setSD="0" ChFAckReq="0" CRC="valid"/>
    <Transition SourceState="WaitOnSPDU_21" TargetState="CheckSPDU_22"/>
    <Transition SourceState="CheckSPDU_22" TargetState="PrepareResponse_25"/>
    <Transition SourceState="PrepareResponse_25" TargetState="WaitOnSPDU_26"/>
    <FSDeviceSend PDin="PD" PortNum="valid" DCount="5" SDset="1" DCommErr="1" DTimeout="1" CRC="valid"/>
    <FSDeviceReceive PDout="PD" PortNum="valid" MCount="3" setSD="0" ChFAckReq="0" CRC="valid"/>
    <Transition SourceState="WaitOnSPDU_26" TargetState="CheckSPDU_27"/>
    <Transition SourceState="CheckSPDU_27" TargetState="PrepareResponse_25"/>
    <Transition SourceState="PrepareResponse_25" TargetState="WaitOnSPDU_26"/>
    <FSDeviceSend PDin="PD" PortNum="valid" DCount="4" SDset="1" DCommErr="1" DTimeout="0" CRC="valid"/>
    <FSDeviceReceive PDout="PD" PortNum="valid" MCount="4" setSD="0" ChFAckReq="0" CRC="valid"/>
    <Transition SourceState="WaitOnSPDU_26" TargetState="CheckSPDU_27"/>
    <Transition SourceState="CheckSPDU_27" TargetState="PrepareResponse_25"/>
    <Transition SourceState="PrepareResponse_25" TargetState="WaitOnSPDU_26"/>
    <FSDeviceSend PDin="PD" PortNum="valid" DCount="3" SDset="1" DCommErr="0" DTimeout="0" CRC="valid"/>
    <FSDeviceReceive PDout="PD" PortNum="valid" MCount="5" setSD="0" ChFAckReq="0" CRC="valid"/>
    <Transition SourceState="WaitOnSPDU_26" TargetState="CheckSPDU_27"/>
    <Transition SourceState="CheckSPDU_27" TargetState="PrepareResponse_25"/>
    <Transition SourceState="PrepareResponse_25" TargetState="WaitOnSPDU_26"/>
    <FSDeviceSend PDin="PD" PortNum="valid" DCount="2" SDset="1" DCommErr="0" DTimeout="0" CRC="valid"/>
    <FSDeviceReceive PDout="PD" PortNum="valid" MCount="6" setSD="0" ChFAckReq="0" CRC="valid"/>
    <Transition SourceState="WaitOnSPDU_26" TargetState="CheckSPDU_27"/>
    <Transition SourceState="CheckSPDU_27" TargetState="PrepareResponse_23"/>
```

```
    <Transition SourceState="PrepareResponse_23" TargetState="WaitOnSPDU_24"/>
    <FSDeviceSend PDin="PD" PortNum="valid" DCount="1" SDset="0" DCommErr="0" DTimeout="0" CRC="valid"/>
    <FSDeviceReceive PDout="PD" PortNum="valid" MCount="0" setSD="0" ChFAckReq="0" CRC="invalid"/>
    <Transition SourceState="WaitOnSPDU_24" TargetState="PrepareResponse_25"/>
    <Transition SourceState="PrepareResponse_25" TargetState="WaitOnSPDU_26"/>
    <FSDeviceSend PDin="PD" PortNum="valid" DCount="7" SDset="1" DCommErr="1" DTimeout="0" CRC="valid"/>
  </FSDeviceSclTestCaseSteps>
</Testroot>
```

9.2.91 Test script 91

Table 145 defines the test conditions for this test case. The associated XML file contains steps and message parameters for the state flow check in case of no error, MCount = 1, and Timeout.

Table 145 – FS-Device test script 91

TEST CASE ATTRIBUTES	IDENTIFICATION / REFERENCE
Identification (ID)	SDCI_FSTC_0142
Name	FSTCD_SCLD_FLOW_SETSD0MC1TO
Purpose (short)	
Equipment under test (EUT)	FS-Device
Test case version	1.0
Category / type	FS-Device automated SCL protocol test
Specification (clause)	[3] clause 11.3.3, Figure 37 (services); clause 11.5.3, Figure 42 (state chart)
Configuration / setup	See Table 54
TEST CASE	**CONDITIONS / PERFORMANCE**
Purpose (detailed)	Protocol flow in case of distinct error
Precondition	FS-Device waiting for the first message
Procedure	See XML file "IO-Link-Safety_spec_device_final_testsuite_testcase_91.xml"
Test parameter	See Table 54 and XML file
Post condition	–
TEST CASE RESULTS	**CHECK / REACTION**
Evaluation	Comparison of expected and received values according to the XML file
Test passed	Comparison OK
Test failed (examples)	Comparison not OK
Report	Printout of the automated SCL protocol tester <pass/fail>

Content of file "IO-Link-Safety_spec_device_final_testsuite_testcase_91.xml":


```xml
<?xml version="1.0" encoding="UTF-8"?>
<Testroot xsi:noNamespaceSchemaLocation="IO-Link-Safety-Test-Procedure_Types_V1.0.xsd"
xmlns:xsi="http://www.w3.org/2001/XMLSchema-instance" version="1.2" name="tc_91" date="20.11.2018: 14:01:13.954">
  <FSDeviceSclTestCaseSteps>
    <Transition SourceState="Init" TargetState="SystemStart_20"/>
    <Transition SourceState="SystemStart_20" TargetState="WaitOnSPDU_21"/>
    <FSDeviceReceive PDout="PD" PortNum="valid" MCount="1" setSD="0" ChFAckReq="0" CRC="valid"/>
    <Transition SourceState="WaitOnSPDU_21" TargetState="CheckSPDU_22"/>
    <Transition SourceState="CheckSPDU_22" TargetState="PrepareResponse_25"/>
    <Transition SourceState="PrepareResponse_25" TargetState="WaitOnSPDU_26"/>
    <FSDeviceSend PDin="PD" PortNum="valid" DCount="6" SDset="1" DCommErr="1" DTimeout="1" CRC="valid"/>
    <FSDeviceReceive PDout="PD" PortNum="valid" MCount="2" setSD="0" ChFAckReq="0" CRC="valid"/>
    <Transition SourceState="WaitOnSPDU_26" TargetState="CheckSPDU_27"/>
    <Transition SourceState="CheckSPDU_27" TargetState="PrepareResponse_25"/>
    <Transition SourceState="PrepareResponse_25" TargetState="WaitOnSPDU_26"/>
    <FSDeviceSend PDin="PD" PortNum="valid" DCount="5" SDset="1" DCommErr="1" DTimeout="0" CRC="valid"/>
    <FSDeviceReceive PDout="PD" PortNum="valid" MCount="3" setSD="0" ChFAckReq="0" CRC="valid"/>
    <Transition SourceState="WaitOnSPDU_26" TargetState="CheckSPDU_27"/>
    <Transition SourceState="CheckSPDU_27" TargetState="PrepareResponse_25"/>
    <Transition SourceState="PrepareResponse_25" TargetState="WaitOnSPDU_26"/>
    <FSDeviceSend PDin="PD" PortNum="valid" DCount="4" SDset="1" DCommErr="0" DTimeout="0" CRC="valid"/>
    <FSDeviceReceive PDout="PD" PortNum="valid" MCount="4" setSD="0" ChFAckReq="0" CRC="valid"/>
    <Transition SourceState="WaitOnSPDU_26" TargetState="CheckSPDU_27"/>
    <Transition SourceState="CheckSPDU_27" TargetState="PrepareResponse_25"/>
    <Transition SourceState="PrepareResponse_25" TargetState="WaitOnSPDU_26"/>
    <FSDeviceSend PDin="PD" PortNum="valid" DCount="3" SDset="1" DCommErr="0" DTimeout="0" CRC="valid"/>
    <FSDeviceReceive PDout="PD" PortNum="valid" MCount="5" setSD="0" ChFAckReq="0" CRC="valid"/>
    <Transition SourceState="WaitOnSPDU_26" TargetState="CheckSPDU_27"/>
    <Transition SourceState="CheckSPDU_27" TargetState="PrepareResponse_23"/>
```

```
    <Transition SourceState="PrepareResponse_23" TargetState="WaitOnSPDU_24"/>
    <FSDeviceSend PDin="PD" PortNum="valid" DCount="2" SDset="0" DCommErr="0" DTimeout="0" CRC="valid"/>
    <FSDeviceReceive PDout="PD" PortNum="valid" MCount="0" setSD="0" ChFAckReq="0" CRC="invalid"/>
    <Transition SourceState="WaitOnSPDU_24" TargetState="PrepareResponse_25"/>
    <Transition SourceState="PrepareResponse_25" TargetState="WaitOnSPDU_26"/>
    <FSDeviceSend PDin="PD" PortNum="valid" DCount="7" SDset="1" DCommErr="1" DTimeout="0" CRC="valid"/>
  </FSDeviceSclTestCaseSteps>
</Testroot>
```

9.2.92 Test script 92

Table 146 defines the test conditions for this test case. The associated XML file contains steps and message parameters for the state flow check in case of no error, MCount = 1, and Timeout.

Table 146 – FS-Device test script 92

TEST CASE ATTRIBUTES	IDENTIFICATION / REFERENCE
Identification (ID)	SDCI_FSTC_0143
Name	FSTCD_SCLD_FLOW_SETSD0MC1TO
Purpose (short)	
Equipment under test (EUT)	FS-Device
Test case version	1.0
Category / type	FS-Device automated SCL protocol test
Specification (clause)	[3] clause 11.3.3, Figure 37 (services); clause 11.5.3, Figure 42 (state chart)
Configuration / setup	See Table 54
TEST CASE	**CONDITIONS / PERFORMANCE**
Purpose (detailed)	Protocol flow in case of distinct error
Precondition	FS-Device waiting for the first message
Procedure	See XML file "IO-Link-Safety_spec_device_final_testsuite_testcase_92.xml"
Test parameter	See Table 54 and XML file
Post condition	–
TEST CASE RESULTS	**CHECK / REACTION**
Evaluation	Comparison of expected and received values according to the XML file
Test passed	Comparison OK
Test failed (examples)	Comparison not OK
Report	Printout of the automated SCL protocol tester <pass/fail>

Content of file "IO-Link-Safety_spec_device_final_testsuite_testcase_92.xml":


```xml
<?xml version="1.0" encoding="UTF-8"?>
<Testroot xsi:noNamespaceSchemaLocation="IO-Link-Safety-Test-Procedure_Types_V1.0.xsd"
xmlns:xsi="http://www.w3.org/2001/XMLSchema-instance" version="1.2" name="tc_92" date="20.11.2018: 14:01:13.954">
  <FSDeviceSclTestCaseSteps>
    <Transition SourceState="Init" TargetState="SystemStart_20"/>
    <Transition SourceState="SystemStart_20" TargetState="WaitOnSPDU_21"/>
    <FSDeviceReceive PDout="PD" PortNum="valid" MCount="1" setSD="0" ChFAckReq="0" CRC="valid"/>
    <Transition SourceState="WaitOnSPDU_21" TargetState="CheckSPDU_22"/>
    <Transition SourceState="CheckSPDU_22" TargetState="PrepareResponse_25"/>
    <Transition SourceState="PrepareResponse_25" TargetState="WaitOnSPDU_26"/>
    <FSDeviceSend PDin="PD" PortNum="valid" DCount="6" SDset="1" DCommErr="1" DTimeout="1" CRC="valid"/>
    <FSDeviceReceive PDout="PD" PortNum="valid" MCount="2" setSD="0" ChFAckReq="0" CRC="valid"/>
    <Transition SourceState="WaitOnSPDU_26" TargetState="CheckSPDU_27"/>
    <Transition SourceState="CheckSPDU_27" TargetState="PrepareResponse_25"/>
    <Transition SourceState="PrepareResponse_25" TargetState="WaitOnSPDU_26"/>
    <FSDeviceSend PDin="PD" PortNum="valid" DCount="5" SDset="1" DCommErr="1" DTimeout="0" CRC="valid"/>
    <FSDeviceReceive PDout="PD" PortNum="valid" MCount="3" setSD="0" ChFAckReq="0" CRC="valid"/>
    <Transition SourceState="WaitOnSPDU_26" TargetState="CheckSPDU_27"/>
    <Transition SourceState="CheckSPDU_27" TargetState="PrepareResponse_25"/>
    <Transition SourceState="PrepareResponse_25" TargetState="WaitOnSPDU_26"/>
    <FSDeviceSend PDin="PD" PortNum="valid" DCount="4" SDset="1" DCommErr="0" DTimeout="0" CRC="valid"/>
    <FSDeviceReceive PDout="PD" PortNum="valid" MCount="4" setSD="0" ChFAckReq="0" CRC="valid"/>
    <Transition SourceState="WaitOnSPDU_26" TargetState="CheckSPDU_27"/>
    <Transition SourceState="CheckSPDU_27" TargetState="PrepareResponse_25"/>
    <Transition SourceState="PrepareResponse_25" TargetState="WaitOnSPDU_26"/>
    <FSDeviceSend PDin="PD" PortNum="valid" DCount="3" SDset="1" DCommErr="0" DTimeout="0" CRC="valid"/>
    <FSDeviceReceive PDout="PD" PortNum="valid" MCount="5" setSD="0" ChFAckReq="0" CRC="valid"/>
    <Transition SourceState="WaitOnSPDU_26" TargetState="CheckSPDU_27"/>
    <Transition SourceState="CheckSPDU_27" TargetState="PrepareResponse_23"/>
```

```
    <Transition SourceState="PrepareResponse_23" TargetState="WaitOnSPDU_24"/>
    <FSDeviceSend PDin="PD" PortNum="valid" DCount="2" SDset="0" DCommErr="0" DTimeout="0" CRC="valid"/>
    <FSDeviceReceive PDout="PD" PortNum="valid" MCount="6" setSD="0" ChFAckReq="0" CRC="invalid"/>
    <Transition SourceState="WaitOnSPDU_24" TargetState="PrepareResponse_25"/>
    <Transition SourceState="PrepareResponse_25" TargetState="WaitOnSPDU_26"/>
    <FSDeviceSend PDin="PD" PortNum="valid" DCount="1" SDset="1" DCommErr="1" DTimeout="0" CRC="valid"/>
  </FSDeviceSclTestCaseSteps>
</Testroot>
```

9.2.93 Test script 93

Table 147 defines the test conditions for this test case. The associated XML file contains steps and message parameters for the state flow check in case of no error, MCount = 3, and Timeout.

Table 147 – FS-Device test script 93

TEST CASE ATTRIBUTES	IDENTIFICATION / REFERENCE
Identification (ID)	SDCI_FSTC_0144
Name	FSTCD_SCLD_FLOW_SETSD0MC3
Purpose (short)	
Equipment under test (EUT)	FS-Device
Test case version	1.0
Category / type	FS-Device automated SCL protocol test
Specification (clause)	[3] clause 11.3.3, Figure 37 (services); clause 11.5.3, Figure 42 (state chart)
Configuration / setup	See Table 54
TEST CASE	**CONDITIONS / PERFORMANCE**
Purpose (detailed)	Protocol flow in case of distinct error
Precondition	FS-Device waiting for the first message
Procedure	See XML file "IO-Link-Safety_spec_device_final_testsuite_testcase_93.xml"
Test parameter	See Table 54 and XML file
Post condition	–
TEST CASE RESULTS	**CHECK / REACTION**
Evaluation	Comparison of expected and received values according to the XML file
Test passed	Comparison OK
Test failed (examples)	Comparison not OK
Report	Printout of the automated SCL protocol tester <pass/fail>

Content of file "IO-Link-Safety_spec_device_final_testsuite_testcase_93.xml":


```xml
<?xml version="1.0" encoding="UTF-8"?>
<Testroot xsi:noNamespaceSchemaLocation="IO-Link-Safety-Test-Procedure_Types_V1.0.xsd"
xmlns:xsi="http://www.w3.org/2001/XMLSchema-instance" version="1.2" name="tc_93" date="20.11.2018: 14:01:13.954">
  <FSDeviceSclTestCaseSteps>
    <Transition SourceState="Init" TargetState="SystemStart_20"/>
    <Transition SourceState="SystemStart_20" TargetState="WaitOnSPDU_21"/>
    <FSDeviceReceive PDout="PD" PortNum="valid" MCount="3" setSD="0" ChFAckReq="0" CRC="valid"/>
    <Transition SourceState="WaitOnSPDU_21" TargetState="CheckSPDU_22"/>
    <Transition SourceState="CheckSPDU_22" TargetState="PrepareResponse_25"/>
    <Transition SourceState="PrepareResponse_25" TargetState="WaitOnSPDU_26"/>
    <FSDeviceSend PDin="PD" PortNum="valid" DCount="4" SDset="1" DCommErr="1" DTimeout="1" CRC="valid"/>
    <FSDeviceReceive PDout="PD" PortNum="valid" MCount="4" setSD="0" ChFAckReq="0" CRC="valid"/>
    <Transition SourceState="WaitOnSPDU_26" TargetState="CheckSPDU_27"/>
    <Transition SourceState="CheckSPDU_27" TargetState="PrepareResponse_25"/>
    <Transition SourceState="PrepareResponse_25" TargetState="WaitOnSPDU_26"/>
    <FSDeviceSend PDin="PD" PortNum="valid" DCount="3" SDset="1" DCommErr="1" DTimeout="0" CRC="valid"/>
    <FSDeviceReceive PDout="PD" PortNum="valid" MCount="5" setSD="0" ChFAckReq="0" CRC="valid"/>
    <Transition SourceState="WaitOnSPDU_26" TargetState="CheckSPDU_27"/>
    <Transition SourceState="CheckSPDU_27" TargetState="PrepareResponse_25"/>
    <Transition SourceState="PrepareResponse_25" TargetState="WaitOnSPDU_26"/>
    <FSDeviceSend PDin="PD" PortNum="valid" DCount="2" SDset="1" DCommErr="0" DTimeout="0" CRC="valid"/>
    <FSDeviceReceive PDout="PD" PortNum="valid" MCount="6" setSD="0" ChFAckReq="0" CRC="valid"/>
    <Transition SourceState="WaitOnSPDU_26" TargetState="CheckSPDU_27"/>
    <Transition SourceState="CheckSPDU_27" TargetState="PrepareResponse_25"/>
    <Transition SourceState="PrepareResponse_25" TargetState="WaitOnSPDU_26"/>
    <FSDeviceSend PDin="PD" PortNum="valid" DCount="1" SDset="1" DCommErr="0" DTimeout="0" CRC="valid"/>
    <FSDeviceReceive PDout="PD" PortNum="valid" MCount="7" setSD="0" ChFAckReq="0" CRC="valid"/>
    <Transition SourceState="WaitOnSPDU_26" TargetState="CheckSPDU_27"/>
    <Transition SourceState="CheckSPDU_27" TargetState="PrepareResponse_23"/>
```

```
    <Transition SourceState="PrepareResponse_23" TargetState="WaitOnSPDU_24"/>
    <FSDeviceSend PDin="PD" PortNum="valid" DCount="0" SDset="0" DCommErr="0" DTimeout="0" CRC="valid"/>
    <FSDeviceReceive PDout="PD" PortNum="valid" MCount="1" setSD="0" ChFAckReq="0" CRC="valid"/>
    <Transition SourceState="WaitOnSPDU_24" TargetState="CheckSPDU_22"/>
    <Transition SourceState="CheckSPDU_22" TargetState="PrepareResponse_23"/>
    <Transition SourceState="PrepareResponse_23" TargetState="WaitOnSPDU_24"/>
    <FSDeviceSend PDin="PD" PortNum="valid" DCount="6" SDset="0" DCommErr="0" DTimeout="0" CRC="valid"/>
  </FSDeviceSclTestCaseSteps>
</Testroot>
```

9.2.94 Test script 94

Table 148 defines the test conditions for this test case. The associated XML file contains steps and message parameters for the state flow check in case of no error, MCount = 1, and Timeout.

Table 148 – FS-Device test script 94

TEST CASE ATTRIBUTES	IDENTIFICATION / REFERENCE
Identification (ID)	SDCI_FSTC_0145
Name	FSTCD_SCLD_FLOW_SETSD0MC1TO
Purpose (short)	
Equipment under test (EUT)	FS-Device
Test case version	1.0
Category / type	FS-Device automated SCL protocol test
Specification (clause)	[3] clause 11.3.3, Figure 37 (services); clause 11.5.3, Figure 42 (state chart)
Configuration / setup	See Table 54
TEST CASE	**CONDITIONS / PERFORMANCE**
Purpose (detailed)	Protocol flow in case of distinct error
Precondition	FS-Device waiting for the first message
Procedure	See XML file "IO-Link-Safety_spec_device_final_testsuite_testcase_94.xml"
Test parameter	See Table 54 and XML file
Post condition	–
TEST CASE RESULTS	**CHECK / REACTION**
Evaluation	Comparison of expected and received values according to the XML file
Test passed	Comparison OK
Test failed (examples)	Comparison not OK
Report	Printout of the automated SCL protocol tester <pass/fail>

Content of file "IO-Link-Safety_spec_device_final_testsuite_testcase_94.xml":

```xml
<?xml version="1.0" encoding="UTF-8"?>
<Testroot xsi:noNamespaceSchemaLocation="IO-Link-Safety-Test-Procedure_Types_V1.0.xsd"
xmlns:xsi="http://www.w3.org/2001/XMLSchema-instance" version="1.2" name="tc_94" date="20.11.2018: 14:01:13.954">
  <FSDeviceSclTestCaseSteps>
    <Transition SourceState="Init" TargetState="SystemStart_20"/>
    <Transition SourceState="SystemStart_20" TargetState="WaitOnSPDU_21"/>
    <FSDeviceReceive PDout="PD" PortNum="valid" MCount="1" setSD="0" ChFAckReq="0" CRC="valid"/>
    <Transition SourceState="WaitOnSPDU_21" TargetState="CheckSPDU_22"/>
    <Transition SourceState="CheckSPDU_22" TargetState="PrepareResponse_25"/>
    <Transition SourceState="PrepareResponse_25" TargetState="WaitOnSPDU_26"/>
    <FSDeviceSend PDin="PD" PortNum="valid" DCount="6" SDset="1" DCommErr="1" DTimeout="1" CRC="valid"/>
    <FSDeviceReceive PDout="PD" PortNum="valid" MCount="2" setSD="0" ChFAckReq="0" CRC="valid"/>
    <Transition SourceState="WaitOnSPDU_26" TargetState="CheckSPDU_27"/>
    <Transition SourceState="CheckSPDU_27" TargetState="PrepareResponse_25"/>
    <Transition SourceState="PrepareResponse_25" TargetState="WaitOnSPDU_26"/>
    <FSDeviceSend PDin="PD" PortNum="valid" DCount="5" SDset="1" DCommErr="1" DTimeout="0" CRC="valid"/>
    <FSDeviceReceive PDout="PD" PortNum="valid" MCount="3" setSD="0" ChFAckReq="0" CRC="valid"/>
    <Transition SourceState="WaitOnSPDU_26" TargetState="CheckSPDU_27"/>
    <Transition SourceState="CheckSPDU_27" TargetState="PrepareResponse_25"/>
    <Transition SourceState="PrepareResponse_25" TargetState="WaitOnSPDU_26"/>
    <FSDeviceSend PDin="PD" PortNum="valid" DCount="4" SDset="1" DCommErr="0" DTimeout="0" CRC="valid"/>
    <FSDeviceReceive PDout="PD" PortNum="valid" MCount="4" setSD="0" ChFAckReq="0" CRC="valid"/>
    <Transition SourceState="WaitOnSPDU_26" TargetState="CheckSPDU_27"/>
    <Transition SourceState="CheckSPDU_27" TargetState="PrepareResponse_25"/>
    <Transition SourceState="PrepareResponse_25" TargetState="WaitOnSPDU_26"/>
    <FSDeviceSend PDin="PD" PortNum="valid" DCount="3" SDset="1" DCommErr="0" DTimeout="0" CRC="valid"/>
    <FSDeviceReceive PDout="PD" PortNum="valid" MCount="5" setSD="0" ChFAckReq="0" CRC="valid"/>
    <Transition SourceState="WaitOnSPDU_26" TargetState="CheckSPDU_27"/>
    <Transition SourceState="CheckSPDU_27" TargetState="PrepareResponse_23"/>
```

```
    <Transition SourceState="PrepareResponse_23" TargetState="WaitOnSPDU_24"/>
    <FSDeviceSend PDin="PD" PortNum="valid" DCount="2" SDset="0" DCommErr="0" DTimeout="0" CRC="valid"/>
    <FSDeviceReceive PDout="PD" PortNum="valid" MCount="7" setSD="0" ChFAckReq="0" CRC="valid"/>
    <Transition SourceState="WaitOnSPDU_24" TargetState="CheckSPDU_22"/>
    <Transition SourceState="CheckSPDU_22" TargetState="PrepareResponse_25"/>
    <Transition SourceState="PrepareResponse_25" TargetState="WaitOnSPDU_26"/>
    <FSDeviceSend PDin="PD" PortNum="valid" DCount="0" SDset="1" DCommErr="1" DTimeout="0" CRC="valid"/>
  </FSDeviceSclTestCaseSteps>
</Testroot>
```

9.2.95 Test script 95

Table 149 defines the test conditions for this test case. The associated XML file contains steps and message parameters for the state flow check in case of no error, MCount = 3, and Timeout.

Table 149 – FS-Device test script 95

TEST CASE ATTRIBUTES	IDENTIFICATION / REFERENCE
Identification (ID)	SDCI_FSTC_0146
Name	FSTCD_SCLD_FLOW_SETSD0MC3TO
Purpose (short)	
Equipment under test (EUT)	FS-Device
Test case version	1.0
Category / type	FS-Device automated SCL protocol test
Specification (clause)	[3] clause 11.3.3, Figure 37 (services); clause 11.5.3, Figure 42 (state chart)
Configuration / setup	See Table 54
TEST CASE	**CONDITIONS / PERFORMANCE**
Purpose (detailed)	Protocol flow in case of distinct error
Precondition	FS-Device waiting for the first message
Procedure	See XML file "IO-Link-Safety_spec_device_final_testsuite_testcase_95.xml"
Test parameter	See Table 54 and XML file
Post condition	–
TEST CASE RESULTS	**CHECK / REACTION**
Evaluation	Comparison of expected and received values according to the XML file
Test passed	Comparison OK
Test failed (examples)	Comparison not OK
Report	Printout of the automated SCL protocol tester <pass/fail>

Content of file "IO-Link-Safety_spec_device_final_testsuite_testcase_95.xml":


```xml
<?xml version="1.0" encoding="UTF-8"?>
<Testroot xsi:noNamespaceSchemaLocation="IO-Link-Safety-Test-Procedure_Types_V1.0.xsd"
xmlns:xsi="http://www.w3.org/2001/XMLSchema-instance" version="1.2" name="tc_95" date="20.11.2018: 14:01:13.954">
  <FSDeviceSclTestCaseSteps>
    <Transition SourceState="Init" TargetState="SystemStart_20"/>
    <Transition SourceState="SystemStart_20" TargetState="WaitOnSPDU_21"/>
    <FSDeviceReceive PDout="PD" PortNum="valid" MCount="3" setSD="0" ChFAckReq="0" CRC="valid"/>
    <Transition SourceState="WaitOnSPDU_21" TargetState="CheckSPDU_22"/>
    <Transition SourceState="CheckSPDU_22" TargetState="PrepareResponse_25"/>
    <Transition SourceState="PrepareResponse_25" TargetState="WaitOnSPDU_26"/>
    <FSDeviceSend PDin="PD" PortNum="valid" DCount="4" SDset="1" DCommErr="1" DTimeout="1" CRC="valid"/>
    <FSDeviceReceive PDout="PD" PortNum="valid" MCount="4" setSD="0" ChFAckReq="0" CRC="valid"/>
    <Transition SourceState="WaitOnSPDU_26" TargetState="CheckSPDU_27"/>
    <Transition SourceState="CheckSPDU_27" TargetState="PrepareResponse_25"/>
    <Transition SourceState="PrepareResponse_25" TargetState="WaitOnSPDU_26"/>
    <FSDeviceSend PDin="PD" PortNum="valid" DCount="3" SDset="1" DCommErr="1" DTimeout="0" CRC="valid"/>
    <FSDeviceReceive PDout="PD" PortNum="valid" MCount="5" setSD="0" ChFAckReq="0" CRC="valid"/>
    <Transition SourceState="WaitOnSPDU_26" TargetState="CheckSPDU_27"/>
    <Transition SourceState="CheckSPDU_27" TargetState="PrepareResponse_25"/>
    <Transition SourceState="PrepareResponse_25" TargetState="WaitOnSPDU_26"/>
    <FSDeviceSend PDin="PD" PortNum="valid" DCount="2" SDset="1" DCommErr="0" DTimeout="0" CRC="valid"/>
    <FSDeviceReceive PDout="PD" PortNum="valid" MCount="6" setSD="0" ChFAckReq="0" CRC="valid"/>
    <Transition SourceState="WaitOnSPDU_26" TargetState="CheckSPDU_27"/>
    <Transition SourceState="CheckSPDU_27" TargetState="PrepareResponse_25"/>
    <Transition SourceState="PrepareResponse_25" TargetState="WaitOnSPDU_26"/>
    <FSDeviceSend PDin="PD" PortNum="valid" DCount="1" SDset="1" DCommErr="0" DTimeout="0" CRC="valid"/>
    <FSDeviceReceive PDout="PD" PortNum="valid" MCount="7" setSD="0" ChFAckReq="0" CRC="valid"/>
    <Transition SourceState="WaitOnSPDU_26" TargetState="CheckSPDU_27"/>
    <Transition SourceState="CheckSPDU_27" TargetState="PrepareResponse_23"/>
```

```
    <Transition SourceState="PrepareResponse_23" TargetState="WaitOnSPDU_24"/>
    <FSDeviceSend PDin="PD" PortNum="valid" DCount="0" SDset="0" DCommErr="0" DTimeout="0" CRC="valid"/>
    <FSDeviceReceive PDout="PD" PortNum="valid" MCount="0" setSD="0" ChFAckReq="0" CRC="invalid"/>
    <Transition SourceState="WaitOnSPDU_24" TargetState="PrepareResponse_25"/>
    <Transition SourceState="PrepareResponse_25" TargetState="WaitOnSPDU_26"/>
    <FSDeviceSend PDin="PD" PortNum="valid" DCount="7" SDset="1" DCommErr="1" DTimeout="0" CRC="valid"/>
  </FSDeviceSclTestCaseSteps>
</Testroot>
```

9.2.96 Test script 96

Table 150 defines the test conditions for this test case. The associated XML file contains steps and message parameters for the state flow check in case of no error, MCount = 2, and Timeout.

Table 150 – FS-Device test script 96

TEST CASE ATTRIBUTES	IDENTIFICATION / REFERENCE
Identification (ID)	SDCI_FSTC_0147
Name	FSTCD_SCLD_FLOW_SETSD0MC2TO
Purpose (short)	
Equipment under test (EUT)	FS-Device
Test case version	1.0
Category / type	FS-Device automated SCL protocol test
Specification (clause)	[3] clause 11.3.3, Figure 37 (services); clause 11.5.3, Figure 42 (state chart)
Configuration / setup	See Table 54
TEST CASE	**CONDITIONS / PERFORMANCE**
Purpose (detailed)	Protocol flow in case of distinct error
Precondition	FS-Device waiting for the first message
Procedure	See XML file "IO-Link-Safety_spec_device_final_testsuite_testcase_96.xml"
Test parameter	See Table 54 and XML file
Post condition	–
TEST CASE RESULTS	**CHECK / REACTION**
Evaluation	Comparison of expected and received values according to the XML file
Test passed	Comparison OK
Test failed (examples)	Comparison not OK
Report	Printout of the automated SCL protocol tester <pass/fail>

Content of file "IO-Link-Safety_spec_device_final_testsuite_testcase_96.xml":

```
<?xml version="1.0" encoding="UTF-8"?>
<Testroot xsi:noNamespaceSchemaLocation="IO-Link-Safety-Test-Procedure_Types_V1.0.xsd"
xmlns:xsi="http://www.w3.org/2001/XMLSchema-instance" version="1.2" name="tc_96" date="20.11.2018: 14:01:13.955">
  <FSDeviceSclTestCaseSteps>
    <Transition SourceState="Init" TargetState="SystemStart_20"/>
    <Transition SourceState="SystemStart_20" TargetState="WaitOnSPDU_21"/>
    <FSDeviceReceive PDout="PD" PortNum="valid" MCount="2" setSD="0" ChFAckReq="0" CRC="valid"/>
    <Transition SourceState="WaitOnSPDU_21" TargetState="CheckSPDU_22"/>
    <Transition SourceState="CheckSPDU_22" TargetState="PrepareResponse_25"/>
    <Transition SourceState="PrepareResponse_25" TargetState="WaitOnSPDU_26"/>
    <FSDeviceSend PDin="PD" PortNum="valid" DCount="5" SDset="1" DCommErr="1" DTimeout="1" CRC="valid"/>
    <FSDeviceReceive PDout="PD" PortNum="valid" MCount="3" setSD="0" ChFAckReq="0" CRC="valid"/>
    <Transition SourceState="WaitOnSPDU_26" TargetState="CheckSPDU_27"/>
    <Transition SourceState="CheckSPDU_27" TargetState="PrepareResponse_25"/>
    <Transition SourceState="PrepareResponse_25" TargetState="WaitOnSPDU_26"/>
    <FSDeviceSend PDin="PD" PortNum="valid" DCount="4" SDset="1" DCommErr="1" DTimeout="0" CRC="valid"/>
    <FSDeviceReceive PDout="PD" PortNum="valid" MCount="4" setSD="0" ChFAckReq="0" CRC="valid"/>
    <Transition SourceState="WaitOnSPDU_26" TargetState="CheckSPDU_27"/>
    <Transition SourceState="CheckSPDU_27" TargetState="PrepareResponse_25"/>
    <Transition SourceState="PrepareResponse_25" TargetState="WaitOnSPDU_26"/>
    <FSDeviceSend PDin="PD" PortNum="valid" DCount="3" SDset="1" DCommErr="0" DTimeout="0" CRC="valid"/>
    <FSDeviceReceive PDout="PD" PortNum="valid" MCount="5" setSD="0" ChFAckReq="0" CRC="valid"/>
    <Transition SourceState="WaitOnSPDU_26" TargetState="CheckSPDU_27"/>
    <Transition SourceState="CheckSPDU_27" TargetState="PrepareResponse_25"/>
    <Transition SourceState="PrepareResponse_25" TargetState="WaitOnSPDU_26"/>
    <FSDeviceSend PDin="PD" PortNum="valid" DCount="2" SDset="1" DCommErr="0" DTimeout="0" CRC="valid"/>
    <FSDeviceReceive PDout="PD" PortNum="valid" MCount="6" setSD="0" ChFAckReq="0" CRC="valid"/>
    <Transition SourceState="WaitOnSPDU_26" TargetState="CheckSPDU_27"/>
    <Transition SourceState="CheckSPDU_27" TargetState="PrepareResponse_23"/>
```

```
    <Transition SourceState="PrepareResponse_23" TargetState="WaitOnSPDU_24"/>
    <FSDeviceSend PDin="PD" PortNum="valid" DCount="1" SDset="0" DCommErr="0" DTimeout="0" CRC="valid"/>
    <FSDeviceReceive PDout="PD" PortNum="valid" MCount="7" setSD="0" ChFAckReq="0" CRC="invalid"/>
    <Transition SourceState="WaitOnSPDU_24" TargetState="PrepareResponse_25"/>
    <Transition SourceState="PrepareResponse_25" TargetState="WaitOnSPDU_26"/>
    <FSDeviceSend PDin="PD" PortNum="valid" DCount="0" SDset="1" DCommErr="1" DTimeout="0" CRC="valid"/>
  </FSDeviceSclTestCaseSteps>
</Testroot>
```

10 FS-Device in reference system tests

10.1 Overview and reference systems

The FS-Device in reference system tests comprise tests, where a complete (DTI) and approved FS-Master reference system including FS-Master Tool is available. Rules for reference systems are defined in A.2.6.

IODD testing is specified in Clause 6 and therefore interoperability of the particular IODD of an FS-Device with the reference FS-Master system can be assumed. In case, an IODD tested with the help of the Checker Tool cannot be imported, the testing of the FS-Device shall be continued as far as possible, and in parallel, the manufacturer of the reference system shall be contacted for clarification.

The availability of the Dedicated Tool has been checked in Clause 6.4. It is not necessary,

- if an FS-Device has no parameters for its particular technology (no FST parameter), or
- if the manufacturer of an FS-Device provides CRC signature values (TechParCRC) for any FST parameter combination (e.g. via user manual), which can be entered into the FSP_TechParCRC field of the FS-Master Tool.

The FS-Device in reference system tests comprise tests of the Dedicated Tool, behavior of the FS-Device in case of correct or incorrect FSP protocol parameter, and test of Events that are not covered by other test cases anyway.

10.2 Dedicated Tool

10.2.1 Invocability via registry

Table 151 defines the test conditions for this test case.

Table 151 – Invocability via registry

TEST CASE ATTRIBUTES	IDENTIFICATION / REFERENCE
Identification (ID)	SDCI_FSTC_0148
Name	FSTCD_REFT_INVOKEDEDITOOL
Purpose (short)	"Dedicated Tool" of the FS-Device can be launched/invoked
Equipment under test (EUT)	Dedicated Tool of FS-Device
Test case version	1.0
Category / type	DTI test, test-to-pass
Specification (clause)	[3]
Configuration / setup	FS-Device-Reference-System and user manual
TEST CASE	**CONDITIONS / PERFORMANCE**
Purpose (detailed)	"Dedicated Tool" is dedicated to the FS-Device and can be launched/invoked
Precondition	–
Procedure	a) Install Dedicated Tool according to user manual b) Evaluation 1) c) Launch/invoke Dedicated Tool d) Evaluation 2)
Test parameter	–
Post condition	–
TEST CASE RESULTS	**CHECK / REACTION**
Evaluation	1) Check registry: UUID, AppPath, PID-File, VendorID, and DeviceID 2) Check display
Test passed	Registry values OK and match information in user manual, and FST parameters are visible according to user manual
Test failed (examples)	Any check incorrect
Report	Values OK: <yes/no> <ok | nok>

10.2.2 Calculation of TechParCRC

Table 152 defines the test conditions for this test case.

Table 152 – Calculation of TechParCRC

TEST CASE ATTRIBUTES	IDENTIFICATION / REFERENCE
Identification (ID)	SDCI_FSTC_0149
Name	FSTCD_REFT_CALCDEDITOOL
Purpose (short)	Dedicated Tool presents FST parameter, calculates and displays TechParCRC value
Equipment under test (EUT)	Dedicated Tool of FS-Device (no back channel in DTI communication)
Test case version	1.0
Category / type	DTI test, test-to-pass
Specification (clause)	[3]
Configuration / setup	FS-Device-Reference-System

TEST CASE	CONDITIONS / PERFORMANCE
Purpose (detailed)	Dedicated Tool presents FST parameter, recalculates TechParCRC upon parameter changes, and displays the TechParCRC signature value in decimal form.
Precondition	–
Procedure	a) Launch/invoke Dedicated Tool b) Evaluation 1) c) Modify FST parameter values d) Evaluation 2) e) Copy & Paste TechParCRC signature to FS-Master Tool f) Evaluation 3) g) Perform commissioning of FS-Device (EUT) h) Evaluation 4)
Test parameter	–
Post condition	–

TEST CASE RESULTS	CHECK / REACTION
Evaluation	1) Check availability of TechParCRC display (decimal value) 2) Check changes in TechParCRC display 3) Check reaction of FS-Master Tool (FSP_TechParCRC field) 4) Check behavior of reference system with connected FS-Device
Test passed	All checks correct
Test failed (examples)	Any check incorrect
Report	Values OK: <yes/no> <ok | nok>

10.2.3 DTI communication/Back Channel

Table 153 defines the test conditions for this test case. This test is optional.

Table 153 – DTI communication/Back Channel

TEST CASE ATTRIBUTES	IDENTIFICATION / REFERENCE
Identification (ID)	SDCI_FSTC_0150
Name	FSTCD_REFT_BACKDEDITOOL
Purpose (short)	Dedicated Tool presents FST parameter, calculates and displays TechParCRC value
Equipment under test (EUT)	Dedicated Tool of FS-Device (with back channel in DTI communication)
Test case version	1.0
Category / type	DTI test, test-to-pass
Specification (clause)	[3]
Configuration / setup	FS-Device-Reference-System

TEST CASE	CONDITIONS / PERFORMANCE
Purpose (detailed)	FS-Master Tool invokes Dedicated Tool and passes over FST parameter via TPF. Subsequently, calculation of TechParCRC upon parameter changes takes place. Parameter values and TechParCRC are returned to FS-Master Tool via TBF ("Back Channel").
Precondition	–
Procedure	a) Launch/invoke Dedicated Tool b) Calculate FST_TechParCRC in Dedicated Tool c) Evaluation 1) d) Send back TechParCRC via TBF “Back Channel” to Master Tool e) Evaluation 2) f) If still open close Dedicated Tool
Test parameter	–
Post condition	–

TEST CASE RESULTS	CHECK / REACTION
Evaluation	1) Check availability of TechParCRC display (decimal value) in Dedicated Tool (memorize CRC value) and compare parameter values in displays of Dedicated Tool and FS-Master Tool 2) Check identical TechParCRC display (decimal value) in FS-Master Tool (see 1)) and compare parameter values in displays of Dedicated Tool and FS-Master Tool (parameter values shall match)
Test passed	1) parameter values shall match 2) parameter values shall match
Test failed (examples)	Any check incorrect
Report	Values OK: <yes/no> <ok | nok>

10.2.4 DTI communication to FS-Device

Table 154 defines the test conditions for this test case. This test is optional.

Table 154 – DTI communication to FS-Device

TEST CASE ATTRIBUTES	IDENTIFICATION / REFERENCE
Identification (ID)	SDCI_FSTC_0151
Name	FSTCD_REFT_COMMDEDITOOL
Purpose (short)	DTI communication from Dedicated Tool to FS-Device
Equipment under test (EUT)	Dedicated Tool of FS-Device (with DTI communication and online access)
Test case version	1.0
Category / type	DTI test, test-to-pass
Specification (clause)	[3]
Configuration / setup	FS-Device-Reference-System
TEST CASE	**CONDITIONS / PERFORMANCE**
Purpose (detailed)	DTI communication from Dedicated Tool to FS-Device
Precondition	User manual
Procedure	a) Launch/invoke Dedicated Tool b) Evaluation 1) c) Get access to FS-Device d) Evaluation 2)
Test parameter	–
Post condition	–
TEST CASE RESULTS	**CHECK / REACTION**
Evaluation	1) Check availability of connection display 2) Check connection to FS-Device
Test passed	All checks correct
Test failed (examples)	Any check incorrect
Report	Values OK: <yes/no> <ok | nok>

10.3 FS-Device replacement

10.3.1 Correct FSP parameter values (Out-of-box)

Table 155 defines the test conditions for this test case.

Table 155 – Correct FSP parameter values

TEST CASE ATTRIBUTES	IDENTIFICATION / REFERENCE
Identification (ID)	SDCI_FSTC_0152
Name	FSTCD_REFT_CORRECTFSTVALUES
Purpose (short)	Replace configured FS-Device by same FS-Device with out-of-box parameters
Equipment under test (EUT)	FS-Device
Test case version	1.0
Category / type	FS-Device test, test-to-pass
Specification (clause)	[3]
Configuration / setup	FS-Device-Tester

TEST CASE	CONDITIONS / PERFORMANCE
Purpose (detailed)	Replace configured FS-Device by same FS-Device with out-of-box parameters
Precondition	EUT in armed mode, FSP_TechParCRC valid) FSDT in OPERATE (armed operation)
Procedure	a) Set FSDT Validation&Backup to 3: Backup + Restore e.g. via SMI_PortConfig b) Wait for Event 0xFF27 c) Set FSDT Validation&Backup to 4: Restore e.g. SMI_PortConfig d) Write System Command 131 "Back-to-box" e.g. SMI_DeviceWrite e) Evaluation 1) f) Port power Off/On e.g. via SMI_PortPowerOffOn g) Wait for Port state "SCL_ENABLED" e.g. via ArgBlock FSPortStatusList h) Evaluation 2)
Test parameter	–
Post condition	–

TEST CASE RESULTS	CHECK / REACTION
Evaluation	1) Check Write response 2) Check Port state
Test passed	All checks correct
Test failed (examples)	Any check incorrect
Report	Values OK: <yes/no> <ok | nok>

10.3.2 Incorrect FSP parameter values

Table 156 defines the test conditions for this test case.

Table 156 – Incorrect FSP parameter values

TEST CASE ATTRIBUTES	IDENTIFICATION / REFERENCE
Identification (ID)	SDCI_FSTC_0153
Name	FSTCD_REFT_INCORRECTFSPVALUES
Purpose (short)	Replace configured FS-Device by same FS-Device with different parameters
Equipment under test (EUT)	FS-Device
Test case version	1.0
Category / type	FS-Device test, test-to-fail
Specification (clause)	[3] Figure 56, Table A.1
Configuration / setup	FS-Device-Tester

TEST CASE	CONDITIONS / PERFORMANCE
Purpose (detailed)	Replace configured FS-Device by same FS-Device with different parameters
Precondition	EUT in armed mode, FSP_TechParCRC valid) FSDT in OPERATE (armed operation)
Procedure	a) Read FSP protocol parameter record (0x4201) e.g. SMI_DeviceRead b) Evaluation 1) c) Change parameter in WDTime and set FSP_TechParCRC = 0 *;prepare values* d) Write changed FSP protocol parameter record (0x4201) e.g. SMI_DeviceWrie e) Evaluation 2) f) Set FSP_TechParCRC to valid value *;prepare values* g) Write changed FSP protocol parameter record (0x4201) e.g. SMI_DeviceWrie h) Evaluation 3) f) Port power Off/On e.g. via SMI_PortPowerOffOn g) Wait for Port state "OPERATE" e.g. ArgBlock PortStatusList h) Evaluation 4)
Test parameter	–
Post condition	–

TEST CASE RESULTS	CHECK / REACTION
Evaluation	1) Check Read response 2) Check Write response 3) Check Write response 4) Check Event
Test passed	All ISDU responses OK, and Event 0xB009 received
Test failed (examples)	Any check incorrect and/or Event 0xB009 not received
Report	Values OK: <yes/no> <ok | nok>

10.4 Events

10.4.1 Overview

Most of the FS-Device Events are already covered within the context of other test cases. Table 157 contains a list of Clauses and the concerned Event Codes.

Table 157 – List of FS-Device Events in other test cases

Clause	EventCode	Description
8.2.7, 8.2.8, 11.3.4, 13.5	0xB003	Unexpected authentication code
8.2.10	0xB005	Incorrect FSP_AuthentCRC
10.3.2, 8.2.14	0xB009	Watchdog time out of specification (e.g. "0")
8.2.11	0xB006	Incorrect FSP_ProtParCRC
8.2.3, 8.2.4	0xB00A	No FSP_VerifyRecord received
8.2.5, 8.2.6, 8.2.12	0xB007	Incorrect FSP_TechParCRC
8.2.9	0xB004	Unexpected authentication Port
8.2.13	0xB008	Incorrect FSP_IOStructCRC

Remaining Events are tested in 10.4.2.

10.4.2 Events@communication

Table 158 defines the test conditions for this test case.

Table 158 – Events@communication

TEST CASE ATTRIBUTES	IDENTIFICATION / REFERENCE
Identification (ID)	SDCI_FSTC_0154
Name	FSTCD_REFT_COMMINTERRUPT
Purpose (short)	Events when communication is interrupted due to errors at SPDU exchange
Equipment under test (EUT)	FS-Device
Test case version	1.0
Category / type	FS-Device test, test-to-pass
Specification (clause)	[3]
Configuration / setup	FS-Device-Tester

TEST CASE	CONDITIONS / PERFORMANCE
Purpose (detailed)	Events when communication is interrupted due to errors at SPDU exchange
Precondition	EUT: in armed mode FSDT: in OPERATE (armed operation)
Procedure	a) FSDT send SPDU with wrong CRC b) Evaluation 1) c) FSDT send SPDU with correct CRC d) FSDT send SPDU with incorrect Counter e) Evaluation 2) f) FSDT send SPDU with correct Counter g) FSDT stop sending SPDUs h) Evaluation 3)
Test parameter	–
Post condition	–

TEST CASE RESULTS	CHECK / REACTION
Evaluation	1) Check for Event 0xB000 *;Transmission error (CRC signature)* 2) Check for Event 0xB001 *;Transmission error (Counter)* 3) Check for Event 0xB002 *;Transmission error (Timeout)*
Test passed	All Events received correctly
Test failed (examples)	Any Event incorrect or missing
Report	Event 0xB000 received: <yes/no> <ok | nok> Event 0xB001 received: <yes/no> <ok | nok> Event 0xB002 received: <yes/no> <ok | nok>

10.5 Test with reference FS-Master

10.5.1 Test in regular automation environment

Table 159 defines the test conditions for this test case.

Table 159 – Test of FS-Device with Reference FS-Master

TEST CASE ATTRIBUTES	IDENTIFICATION / REFERENCE
Identification (ID)	SDCI_FSTC_0198
Name	FSTCD_REFT_RM
Purpose (short)	Basic test of FS-Device with Reference FS-Master
Equipment under test (EUT)	FS-Device, IODD, Dedicated Tool
Test case version	1.0
Category / type	Test of basic functionality with reference FS-Master
Specification (clause)	[4]
Configuration / setup	FS-Device, IODD and dedicated tool (if available) applied to a reference FS-Master
TEST CASE	**CONDITIONS / PERFORMANCE**
Purpose (detailed)	Test of basic functionality of the EUT together with a reference FS-Master to show that the EUT is able to establish a safety communication also in regular automation environments.
Precondition	Setup of FS-Reference Master with Master Tool, Engineering and PLC.
Procedure	a) Setup FS-Reference Master System b) Connect EUT c) Configure FS-Device (opt. using Dedicated Tool) d) Evaluation 1) e) Start safe communication f) Evaluation 2) g) execute optional additional tests h) Evaluation 3)
Test parameter	-
Post condition	-
TEST CASE RESULTS	**CHECK / REACTION**
Evaluation	1) Check FSP_VerifyRecord 2) Check safety communication 3) Check results of additional tests
Test passed	1) FSP_VerifyRecord is available 2) Safety communication has started 3) All additional tests show expected results
Test failed (examples)	At least one test shows unexpected results
Report	Values OK : <yes/no>

11 FS-Master Port operations tests

11.1 Overview

The FS-Master Port operations test cases comprise the necessary information about the product to test, the basic FS-Master operations such as identification, authorization, and FSCP authenticity from an upper-level FSCP system and are part of the Functional Tests. Other test cases deal with Port power OFF/ON, VerifyRecord for verification, detection of misconnection, and safe FS-Device replacement. It is up to the manufacturer to assure complete testing for all implemented ports.

11.2 FS-Master meta data

11.2.1 User manual and safety assessment certificate

The test case checks whether not implemented “highly recommended” features are documented.

Table 160 defines the test conditions for this test case.

Table 160 – User manual and safety assessment certificate

TEST CASE ATTRIBUTES	IDENTIFICATION / REFERENCE
Identification (ID)	SDCI_FSTC_0155
Name	FSTCM_INFO_DOCUMENTS
Purpose (short)	Check user/safety manuals for exceptions, properties, and certificates
Equipment under test (EUT)	User/safety manual of FS-Master and Master Tool
Test case version	1.0
Category / type	FS-Master test, test-to-pass
Specification (clause)	[3] "highly recommended" feature status, Annex H.6
Configuration / setup	–

TEST CASE	CONDITIONS / PERFORMANCE
Purpose (detailed)	Manufacturers/vendors are obliged to inform in a user manual about not implemented "highly recommended" features and to provide a "Safety Manual" as well as a safety assessment certificate.
Precondition	–
Procedure	a) Identify in user manual not implemented "highly recommended" features b) Identify information in safety manual according to Annex H.6 in [3] c) Identify functional safety assessment certificate
Test parameter	–
Post condition	–

TEST CASE RESULTS	CHECK / REACTION
Evaluation	1) Check exceptions in user manual 2) Check required parameters in safety manual 3) Check statements for relevant aspects of particular standard (IEC 61508/ ISO13849), the assessment body, and the certificate number
Test passed	Exceptions permitted, and Safety Manual available (for example "product mission time", "safety level - SIL/PL", "probability of a dangerous failure per hour – PFH", and statements on delay times for the calculation of safety function response times, and Certificate accepted and noted in test report
Test failed (examples)	Any check incorrect
Report	Documents OK: <yes/no> <ok | nok>

11.2.2 Connector and cable information

Table 161 defines the test conditions for this test case.

Table 161 – Connector and cable information

TEST CASE ATTRIBUTES	IDENTIFICATION / REFERENCE
Identification (ID)	SDCI_FSTC_0156
Name	FSTCM_CONF_INFO_CONNECTCABLE
Purpose (short)	Check user/safety manuals for connector and cable information (OSSDe)
Equipment under test (EUT)	User/safety manual of FS-Master
Test case version	1.0
Category / type	FS-Master test
Specification (clause)	[3] 4.1.4, Figure 9
Configuration / setup	–
TEST CASE	**CONDITIONS / PERFORMANCE**
Purpose (detailed)	Check user/safety manuals for connector and cable information for OSSDe operation.
Precondition	–
Procedure	a) Identify in user manual connector Pin layout in case of M type connector b) Identify cable recommendations with respect to robustness and loop resistance
Test parameter	–
Post condition	–
TEST CASE RESULTS	**CHECK / REACTION**
Evaluation	1) Check Pin layout 2) Check recommendations on robustness and loop resistance
Test passed	Pin layouts are correct, and Robustness recommendations for cable coating such as "tear proof" and "cut resistant" as well as for loop resistance such that minimum supply voltages are guaranteed at maximum supply current are available
Test failed (examples)	Any check incorrect
Report	Documents OK: <yes/no> <ok | nok>

11.2.3 Default behavior (power, configurations)

Table 23 defines the test conditions for this test case.

Table 162 – Default behavior (power, configurations)

TEST CASE ATTRIBUTES	IDENTIFICATION / REFERENCE
Identification (ID)	SDCI_FSTC_0157
Name	FSTCM_CONF_INFO_DEFAULTPARAM
Purpose (short)	FS-Master information: Power supply, Port configurations
Equipment under test (EUT)	User manual of FS-Master
Test case version	1.0
Category / type	FS-Master test
Specification (clause)	[3] Table 7, Table 8
Configuration / setup	–

TEST CASE	CONDITIONS / PERFORMANCE
Purpose (detailed)	FS-Master information: Power supply (derating), Port configurations
Precondition	–
Procedure	a) Identify parameter "Port power supply" in safety/user manual c) Identify "Port configurations" in safety/user manual d) Identify "Safety function response time" information
Test parameter	–
Post condition	Memorize power supply, Port configurations, response time

TEST CASE RESULTS	CHECK / REACTION
Evaluation	1) Check "Port power supply" information 2) Check possible Port configurations 3) Check SFRT information
Test passed	At least one Port can provide a current of ISMmax ≥ 1000 mA, and Port configurations comply with specification, and SFRT information refers to integration specification and IEC 61784-3 if appropriate
Test failed (examples)	Any check incorrect
Report	Documents OK: <yes/no> <ok | nok>

11.3 FS-Master operations

11.3.1 FS-Master identification

Table 163 defines the test conditions for this test case.

Table 163 – FS-Master identification

TEST CASE ATTRIBUTES	IDENTIFICATION / REFERENCE
Identification (ID)	SDCI_FSTC_0158
Name	FSTCM_INFO_FSMIDENT
Purpose (short)	Get FS-Master identification
Equipment under test (EUT)	FS-Master + Tool
Test case version	1.0
Category / type	FS-Master test, test-to-pass
Specification (clause)	[2] 11.2.4
Configuration / setup	FS-Master-Tester-System
TEST CASE	**CONDITIONS / PERFORMANCE**
Purpose (detailed)	Get FS-Master identification via service SMI_MasterIdentification
Precondition	EUT: PORT_FSCOM SMTU: SMTU_STANDARD_STATE_32
Procedure	a) SMI_MasterIdentification(ArgBlock = 0x0001) *;returns ArgBlock "MasterIdent"* b) Evaluation 1)
Test parameter	–
Post condition	VendorID, MasterID, MasterType, Features_1, MaxNumberOfPorts, PortTypes
TEST CASE RESULTS	**CHECK / REACTION**
Evaluation	1) Check ArgBlock "MasterIdent"
Test passed	MasterIdent. VendorID corresponds to manual and IO-Link reference, and MasterIdent. MasterID corresponds to manual, and *;vendor specific* MasterIdent. MasterType = 3, and *;FS-Master* MasterIdent.Features_1.Bit 2 = 1, and *;PortPowerOffOn* MasterIdent. MaxNumberOfPorts corresponds to Manual, and *;max number = n* MasterIdent. PortTypes[0 to *n*] = {3, 4, or 5} *;no OSSD, OSSD, or Class B*
Test failed (examples)	Any check incorrect
Report	Identification OK: <yes/no> <ok | nok>

11.3.2 FS-Master access and authenticity

Table 164 defines the test conditions for this test case.

Table 164 – FS-Master authenticity

TEST CASE ATTRIBUTES	IDENTIFICATION / REFERENCE
Identification (ID)	SDCI_FSTC_0159
Name	FSTCM_INFO_FSMAUTHENT
Purpose (short)	Get FS-Master authenticity
Equipment under test (EUT)	FS-Master + Tool
Test case version	1.0
Category / type	FS-Master test, test-to-pass
Specification (clause)	[3] 10.2.2
Configuration / setup	FS-Master-Tester-System

TEST CASE	CONDITIONS / PERFORMANCE
Purpose (detailed)	Get FS-Master authenticity via service SMI_FSMasterAccess
Precondition	EUT: PORT_FSCOM SMTU: SMTU_STANDARD_STATE_32
Procedure	a) SMI_FSMasterAccess(ArgBlock = 0x0100 <PW, RPW, Role>) *;Test parameter* *;returns ArgBlock "FSCPAuthenticity"* b) Evaluation 1)
Test parameter	PW = FSMasterPassword *;acquired from manual* RPW = FSResetMasterPW = 0x0000 *;default, no reset of PW* Role = 0x00 *;default*
Post condition	FSCP_Authenticity1, FSCP_Authenticity2

TEST CASE RESULTS	CHECK / REACTION
Evaluation	1) Check ArgBlock "FSCPAuthenticity"
Test passed	Both elements correspond to settings from upper-level FSCP system
Test failed (examples)	Any check incorrect
Report	Authenticity OK: <yes/no> <ok | nok>

11.3.3 PREOPERATE – verification

The test case checks that the VerifyRecord is properly sent to the FS-Device during start-up.

Table 165 defines the test conditions for this test case.

Table 165 – PREOPERATE – verification

TEST CASE ATTRIBUTES	IDENTIFICATION / REFERENCE
Identification (ID)	SDCI_FSTC_0161
Name	FSTCM_FSOP_PREOPVERIFY
Purpose (short)	Check whether VerifyRecord is sent to FS-Device
Equipment under test (EUT)	FS-Master + Tool
Test case version	1.1
Category / type	FS-Master test, test-to-pass
Specification (clause)	[3] Annex A.2.10
Configuration / setup	FS-Master-Tester-System

TEST CASE	CONDITIONS / PERFORMANCE
Purpose (detailed)	Check whether VerifyRecord is sent to FS-Device
Precondition	EUT: PORT_INACTIVE SMTU: SMTU_STANDARD_STATE_32
Procedure	a) SMI_PortConfig (ABPS_FSCONFIG_SAFECOM) b) Wait for Port state "SCL_ENABLED" ; *e. g. via ArgBlock FSPortStatusList* c) SMTU_VerifyRecord_Get *; returns "VerifyRecord"* d) Evaluation 1)
Test parameter	–
Post condition	–

TEST CASE RESULTS	CHECK / REACTION
Evaluation	1) Compare values of "VerifyRecord" with FSP parameters in Port configuration
Test passed	All compared parameters match
Test failed (examples)	Any comparison failed
Report	Values OK: <yes/no> <ok | nok>

11.3.4 PREOPERATE – misconnection

The test case checks whether the FS-Master detects that an FS-Device with unexpected authenticity is connected.

Table 166 defines the test conditions for this test case.

Table 166 – PREOPERATE – misconnection

TEST CASE ATTRIBUTES	IDENTIFICATION / REFERENCE
Identification (ID)	SDCI_FSTC_0162
Name	FSTCM_FSOP_PREOPMISSCONNECT
Purpose (short)	FS-Master indicates FS-Device misconnection
Equipment under test (EUT)	FS-Master + Tool
Test case version	1.1
Category / type	FS-Master test, test-to-fail
Specification (clause)	[3] Annex G.4
Configuration / setup	FS-Master-Tester-System

TEST CASE	CONDITIONS / PERFORMANCE
Purpose (detailed)	Check whether misconnection is detected
Precondition	EUT: PORT_INACTIVE SMTU: SMTU_STANDARD_STATE_32
Procedure	a) SMTU_Authent_Set(Authent1=<different>); *different Authent1 selected* b) SMI_PortConfig (ABPS_FSCONFIG_SAFECOM<Validation&Backup=0>) c) Status = SMI_PortStatus(AB = 0x9100) *; returns FSPortStatusList* d) Repeat with c) until status = SCL_ENABLED e) Evaluation 1) f) Wait on SMI-DeviceEvent *; returns DeviceEvent* g) Evaluation 2
Test parameter	–
Post condition	–

TEST CASE RESULTS	CHECK / REACTION
Evaluation	1) Check ArgBlock "FSPortStatusList" 2) Check ArgBlock "DeviceEvent"
Test passed	FSPortStatusList.PortStatusInfo = 8, and *; SCL_ENABLED* EventCode = 0xB003 *; unexpected authentication code*
Test failed (examples)	Any other PortStatusInfo, or other Event codes, or no Event
Report	Event: <yes/no> <ok | nok> FS-Device EventCode: <value> <ok | nok>

11.3.5 PREOPERATE – replacement

Table 167 defines the test conditions for this test case.

Table 167 – PREOPERATE – replacement

TEST CASE ATTRIBUTES	IDENTIFICATION / REFERENCE
Identification (ID)	SDCI_FSTC_0163
Name	FSTCM_FSOP_PREOPREPLACE
Purpose (short)	FS-Master performs FS-Device replacement correctly
Equipment under test (EUT)	FS-Master + Tool
Test case version	1.0
Category / type	FS-Master test, test-to-pass
Specification (clause)	[3] Annex G.3
Configuration / setup	FS-Master-Tester-System

TEST CASE	CONDITIONS / PERFORMANCE
Purpose (detailed)	Check whether FS-Master performs FS-Device replacement correctly (Back-to-box)
Precondition	EUT: PORT_FSCOM SMTU: SMTU_STANDARD_STATE_32 *; no FST Parameter*
Procedure	a) SMI_PortPowerOffOn(ABPS_PORT_OFF) b) SMTU_Authent_Set(Authent1/2=0, Port=0, CRC=0) *; update CRC to trig.* c) SMI_PortPowerOffOn(ABPS_PORT_ON) *; data storage* d) TM_AWAIT_PORTSTATUS(SCL_ENABLED) e) Evaluation 1) f) Wait for 3 sec g) TM_AWAIT(PortStatus: Number of Diags = 0) *; all events must disappear*
Test parameter	–
Post condition	–

TEST CASE RESULTS	CHECK / REACTION
Evaluation	1) Check ArgBlock "FSPortStatusList"
Test passed	FSPortStatusList.PortStatusInfo = 8, and *; SCL_ENABLED* FSPortStatusList.NumberOfDiags = 0;
Test failed (examples)	Any check incorrect
Report	Values OK: <yes/no> <ok | nok>

11.3.6 Ready Pulse Start

Table 172 defines the test conditions for this test case.

Table 168 – READY Pulse detection

TEST CASE ATTRIBUTES	IDENTIFICATION / REFERENCE
Identification (ID)	SDCI_FSTC_0196
Name	FSTCM_DLMH_READY
Purpose (short)	Check that FS-Master executes after port status change a PortPowerOffOn with the configure minimum shutdown time and wait for a ready pulse of the Device
Equipment under test (EUT)	FS-Master + Tool
Test case version	1.1
Category / type	FS-Master test, test-to-pass
Specification (clause)	[3] 7.2 Figure 25, Table A.1
Configuration / setup	FS-Master-Tester-System

TEST CASE	CONDITIONS / PERFORMANCE
Purpose (detailed)	Check that PortPowerOffOn and Startup Timing for Ready pulse is correct and measure FSP_MinShutDownTime
Precondition	EUT: PORT_POWER_OFF SMTU: SMTU_STANDARD_STATE_32 *; no FST Parameter*
Procedure	a) PortPowerOn b) SMTU_PowerOffTime_Start c) SMI_PortConfig (ABPS_FSCONFIG_SAFECOM <FSP_MinShutDownTime = MinSDT>) ; *Start safe communication* d) SMTU_SPDU_Change *; Communication started* e) Evaluation 1 f) POT = SMTU_PowerOffTime_Get ; *get PowerOffTime* g) Evaluation 2 h) Repeat from a) with next MinSDT
Test parameter	MinSDT = {100, 1000} *; (1 s, 10 s)*
Post condition	–

TEST CASE RESULTS	CHECK / REACTION
Evaluation	1) Check that SMTU_SPDU_Change has returned 2) Check POT
Test passed	1) SMTU_SPDU_Change return within Timeout 2) POT >= FSP_MinShutDownTime
Test failed (examples)	Timeout occurred POT < FSP_MinShutDownTime + 0.01s *; discharge of capacitors*
Report	Values OK: <yes/no> <ok | nok>

11.3.7 Start Repetition

Table 169 defines the test conditions for this test case.

Table 169 – Start Repetition

TEST CASE ATTRIBUTES	IDENTIFICATION / REFERENCE
Identification (ID)	SDCI_FSTC_0197
Name	FSTCM_DLMH_READY_REPEAT
Purpose (short)	Check that FS-Master executes after port status change cycles PortPowerOffOn and until FS-Device enters safe communication
Equipment under test (EUT)	FS-Master + Tool
Test case version	1.0
Category / type	FS-Master test, test-to-fail
Specification (clause)	[3] 7.2 Figure 25
Configuration / setup	FS-Master-Tester-System

TEST CASE	CONDITIONS / PERFORMANCE
Purpose (detailed)	Check that PortPowerOffOn is repeated after missed ready pulse
Precondition	EUT: PORT_POWER_OFF SMTU: SMTU_STANDARD_STATE_32 *; No FST Parameter*
Procedure	a) SMI_FSPortConfiguration (ABPS_FSCONFIG_SAFECOM); *RP set to default = 5s* b) SMTU_Ready_Wait (t2R = 6.5s, tRP=0.75ms) ; *RP issued too late* c) STM_WAIT (FSP_MinShutDownTime*1.1) ; *Wait Shutdown Time* d) ps= SMTU_PowerState_Get ; *Check if power is on* e) Repeat from d) while ps == PowerOn f) Evaluate 1 *; Power is off 2nd time*
Test parameter	–
Post condition	–

TEST CASE RESULTS	CHECK / REACTION
Evaluation	1) Check ps
Test passed	1) ps = Power Off
Test failed (examples)	Timeout occurred
Report	Values OK: <yes/no> <ok | nok>

11.3.8 Ready-Wait

Table 170 defines the test conditions for this test case.

Table 170 – Ready-Wait

TEST CASE ATTRIBUTES	IDENTIFICATION / REFERENCE
Identification (ID)	SDCI_FSTC_0206
Name	FSTCM_DLMH_READY_WAIT
Purpose (short)	Check that FS-Master waits for the Ready Pulse of the Device for the duration passed to the master with the FSP_TimeToReady value in the FS_Portconfiguration SMI Service.
Equipment under test (EUT)	FS-Master + Tool
Test case version	1.0
Category / type	FS-Master test, test-to-fail
Specification (clause)	[3] Table 20, A.2.11, Table A.1
Configuration / setup	FS-Master-Tester-System

TEST CASE	CONDITIONS / PERFORMANCE
Purpose (detailed)	Check that Master waits sufficiently long for the time to ready.
Precondition	EUT: PORT_POWER_OFF SMTU: SMTU_STANDARD_STATE_32 *; No FST Parameter*
Procedure	a) SMTU_Ready_Wait (t2R, tRP=0.75ms) ; *Configure SMTU for t2R* b) SMI_PortConfig (ABPS_FSCONFIG_SAFECOM) ; *makes power cycle* c) WAIT (t2R) ; *Wait for SCL_ENABLED* d) TM_AWAIT_PORTSTATUS(SCL_ENABLED) e) Evaluation 1 f) Repeat from a) with next t2R
Test parameter	t2R = {1, 500, 6000} *; 10ms, 5s, 60s*
Post condition	–

TEST CASE RESULTS	CHECK / REACTION
Evaluation	1) Check status
Test passed	1) status = SCL_ENABLED
Test failed (examples)	Timeout occurred, status is not SCL_ENABLED
Report	Values OK: <yes/no> <ok | nok>

11.3.9 Port Identity

Table 171 defines the test conditions for this test case.

Table 171 – Port Identity

TEST CASE ATTRIBUTES	IDENTIFICATION / REFERENCE
Identification (ID)	SDCI_FSTC_0208
Name	FSTCM_FSOP_PORTIDENTITY
Purpose (short)	Check that FSP-PortNo and IOL-PortNo are identical
Equipment under test (EUT)	FS-Master
Test case version	1.0
Category / type	FS-Master test, test-to-pass
Specification (clause)	[3] A.2.2
Configuration / setup	FS-Master-Tester-System

TEST CASE	CONDITIONS / PERFORMANCE
Purpose (detailed)	The FSP PortNumber and the IO-Link PortNumber shall be identical.
Precondition	EUT: PORT_POWER_OFF SMTU: SMTU_STANDARD_STATE_32 (applied at IOL-Port<A>)
Procedure	1) SMI_FSPDINOut = SMI_FSPDInOut<PortNumber = Port<A>> 2) Evaluation 1)
Test parameter	
Post condition	–

TEST CASE RESULTS	CHECK / REACTION
Evaluation	1) FSPort = FSPDInOut.SPDUIn[5]
Test passed	FSPort = IOL-Port<A>
Test failed (examples)	FSPort != IOL-Port<A>
Report	Values OK: <yes/no> <ok | nok>

12 FS-Master safety communication layer tests

12.1 Interface for the FS-Master SCL test scripts

The test scripts for the automated safety layer tests are encoded as XML files. Each and every test script ("FSMasterSclTestCaseSteps") consists of test step instructions as described in Table 172. The XML Schema of the interface parameters for the FS-Master automated safety layer test is illustrated in Figure 14. The tests described in this section are referred as SCL Tests.

NOTE The general concept of SCL protocol conformance testing is described in A.2.2. The automated safety layer tester for FS-Masters is described in A.2.3.

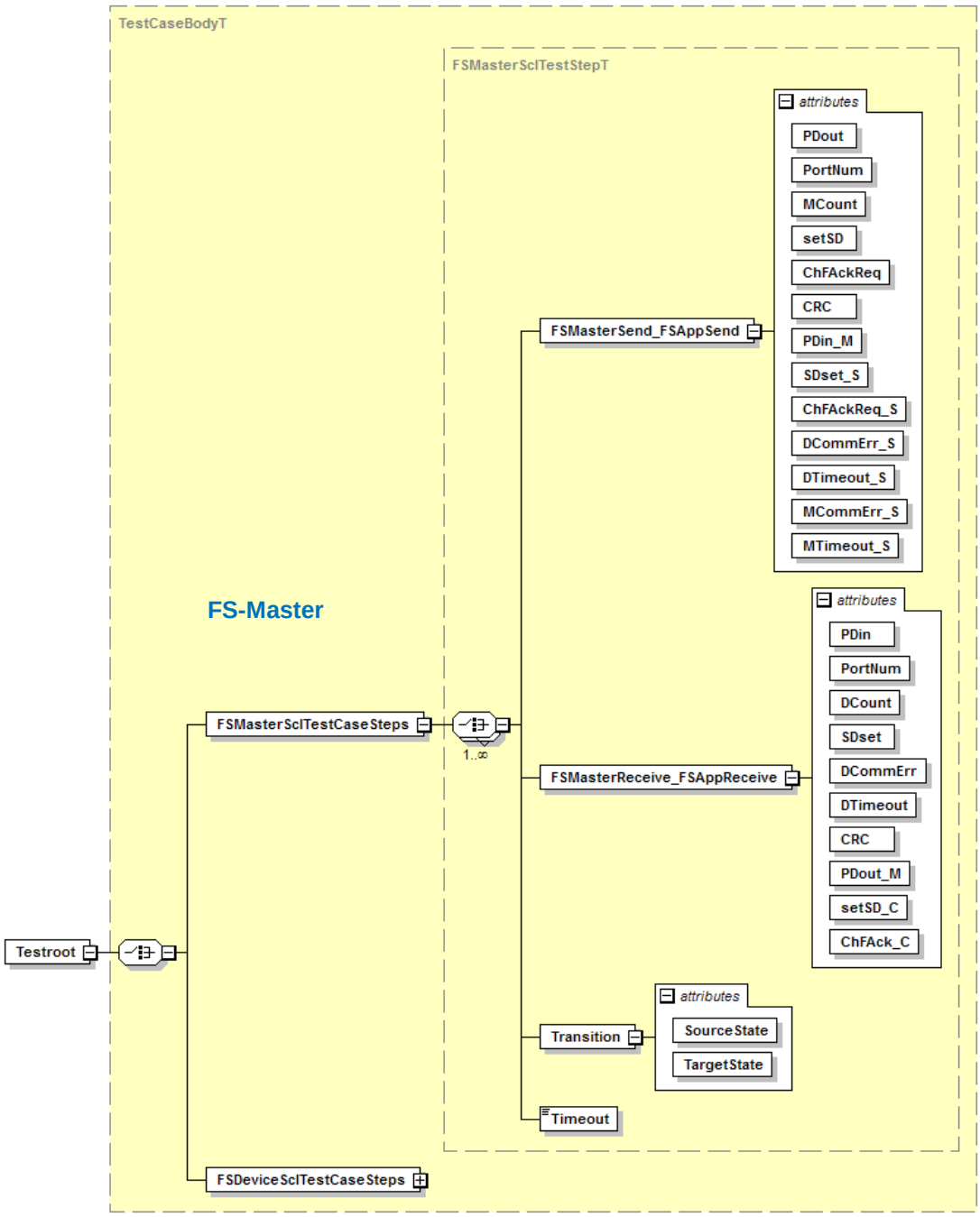

Figure 14 – Schema of steps and parameters/attributes

Table 172 defines the FS-Master interface parameters.

Table 172 – FS-Master interface parameters/attributes

Test step instruction	Parameter	Value range
FSMasterSend_FSAppSend (FS-Master → Test System) (see Annex A.2.2, Figure A.7)	PDout	SD –Test System expects SD values (= 0) PD – Test System expects PD values (> 0)
	PortNum	valid –Test System expects configured Port number
	MCount	0 to 7
	setSD	0, 1
	ChFAckReq	0, 1
	CRC	valid – Test System expects correct CRC-Signature
	PDin_M	SD – Test System expects SD values (= 0) PD – Test System expects PD values (> 0)
	Bit 0: SDset_S	0, 1
	Bit 1: ChFAckReq_S	0, 1
	Bit 2: DCommErr_S	0, 1
	Bit 3: DTimeout_S	0, 1
	Bit 4: MCommErr_S	0, 1
	Bit 5: MTimeout_S	0, 1
FSMasterReceive_FSAppReceive (Test System → FS-Master)	PDin	PD – Test System sends PD values (> 0)
	PortNum	valid – Test System sends configured Port number invalid – Test System sends not configured Port number
	DCount	0 to 7
	SDset	0, 1
	DCommErr	0, 1
	DTimeout	0, 1
	CRC	valid – Test System sends correct CRC-Signature invalid – Test System sends incorrect CRC-Signature
	PDout_M	PD – Test System sends PD values (> 0)
	Bit 0: setSD_C	0, 1
	Bit 1: ChFAck_C	0, 1
Timeout (Test System → FS-Master)		Test System sends no new message within a time delay ≥ MTime. See for example 12.2.3.
Transition (Tag)	SourceState	This parameter is informative and will be inserted only in test logging from test system
	TargetState	This parameter is informative and will be inserted only in test logging from test system

The test step instruction "FSMasterSend_FSAppSend" is used for messages sent by the FS-Master test object (EUT). Within these messages, the test data to the IO-Link communication port and to the FS-Master "processing" interface are specified in one test message. This approach has been chosen due to the special test setup not allowing explicit access for the test system to the "processing" port of the test object (in this case the FS-Master, see Figure A.5).

The values of the parameters *PDout*, *PortNum*, *MCount*, *setSD*, *ChFAckReq* and *CRC* are defined for the IO-Link communication port, whereas the values of the parameters *PDin_M*, *SDset_S*, *ChFAckReq_S*, *DCommErr_S*, *DTimeout_S*, *MCommErr_S,* and *MTimeout_S* are defined for the "processing" interface.

With the test step instruction "FSMasterReceive_FSAppReceive" the reception of test messages by the FS master is specified. The test messages comprise also the IO-Link communication Port and the "processing" interface.

The parameter values of *PDin*, *PortNum*, *DCount*, *SDset*, *DCommErr*, *DTimeout,* and *CRC* are determined for the IO-Link communication Port, whereas the values of the parameters *PDout_M*, *setSD_C*, and *ChFAck_C* are determined for the "processing" interface.

The test step instruction "Timeout" specifies for how long the test system shall not update the response SPDU. This time shall be greater than the watchdog time of the EUT (MTime).

The XML tag "Transition" is used for traceability of test messages with respect to the expected transition of the state machine specified in [3]. This information is only descriptive and has no impact on the test flow of the test tool.

12.2 FS-Master SCL test suite

12.2.1 Test script 1

Table 173 defines the test conditions for this test case. The associated XML file contains steps and message parameters for the state flow check in case of a setSD error, MCount = 0, and DCommErr.

Table 173 – FS-Master test script 1

TEST CASE ATTRIBUTES	IDENTIFICATION / REFERENCE
Identification (ID)	SDCI_FSTC_0164
Name	FSTCM_SCLM_FLOW_SETSD1MC0DCE1
Purpose (short)	
Equipment under test (EUT)	FS-Master
Test case version	1.0
Category / type	FS-Master automated SCL protocol test
Specification (clause)	[3] clause 11.3.2, Figure 36 (services); clause 11.5.2, Figure 41 (state chart)
Configuration / setup	See Table A.208
TEST CASE	**CONDITIONS / PERFORMANCE**
Purpose (detailed)	Protocol flow in case of distinct error
Precondition	FS-Master to send first message
Procedure	See XML file "IO-Link-Safety_spec_master_final_testsuite_testcase_1.xml"
Test parameter	See Table 172 and XML file
Post condition	–
TEST CASE RESULTS	**CHECK / REACTION**
Evaluation	Comparison of expected and received values according to the XML file
Test passed	Comparison OK
Test failed (examples)	Comparison not OK
Report	Printout of the automated SCL protocol tester <pass/fail>

Content of file "IO-Link-Safety_spec_master_final_testsuite_testcase_1.xml":

```
<?xml version="1.0" encoding="UTF-8"?>
<Testroot xsi:noNamespaceSchemaLocation="IO-Link-Safety-Test-Procedure_Types_V1.0.xsd"
xmlns:xsi="http://www.w3.org/2001/XMLSchema-instance" version="1.2" name="tc_1" date="20.11.2018: 14:01:29.066">
  <FSMasterSclTestCaseSteps>
    <Transition SourceState="Init" TargetState="PrepareSPDU_1"/>
    <Transition SourceState="PrepareSPDU_1" TargetState="WaitOnResponse_2"/>
    <FSMasterSend_FSAppSend PDout="SD" PortNum="valid" MCount="0" setSD="1" ChFAckReq="0" CRC="valid"
PDin_M="SD" SDset_S="1" ChFAckReq_S="0" DCommErr_S="0" DTimeout_S="0" MCommErr_S="0" MTimeout_S="0"/>
```

```
    <FSMasterReceive_FSAppReceive PDin="PD" PortNum="valid" DCount="7" SDset="0" DCommErr="1" DTimeout="0"
CRC="valid" PDout_M="PD" setSD_C="0" ChFAck_C="0"/>
    <Transition SourceState="WaitOnResponse_2" TargetState="CheckSPDU_3"/>
    <Transition SourceState="CheckSPDU_3" TargetState="PrepareSPDU_6"/>
    <Transition SourceState="PrepareSPDU_6" TargetState="WaitOnResponse_7"/>
    <FSMasterSend_FSAppSend PDout="SD" PortNum="valid" MCount="1" setSD="1" ChFAckReq="0" CRC="valid"
PDin_M="SD" SDset_S="1" ChFAckReq_S="0" DCommErr_S="1" DTimeout_S="0" MCommErr_S="0" MTimeout_S="0"/>
    <FSMasterReceive_FSAppReceive PDin="PD" PortNum="valid" DCount="6" SDset="0" DCommErr="0" DTimeout="0"
CRC="invalid" PDout_M="PD" setSD_C="0" ChFAck_C="0"/>
    <Transition SourceState="WaitOnResponse_7" TargetState="CheckSPDU_8"/>
    <Transition SourceState="CheckSPDU_8" TargetState="PrepareSPDU_6"/>
    <Transition SourceState="PrepareSPDU_6" TargetState="WaitOnResponse_7"/>
    <FSMasterSend_FSAppSend PDout="SD" PortNum="valid" MCount="2" setSD="1" ChFAckReq="0" CRC="valid"
PDin_M="SD" SDset_S="1" ChFAckReq_S="0" DCommErr_S="0" DTimeout_S="0" MCommErr_S="1" MTimeout_S="0"/>
    <FSMasterReceive_FSAppReceive PDin="PD" PortNum="valid" DCount="5" SDset="0" DCommErr="1" DTimeout="0"
CRC="valid" PDout_M="PD" setSD_C="0" ChFAck_C="0"/>
    <Transition SourceState="WaitOnResponse_7" TargetState="CheckSPDU_8"/>
    <Transition SourceState="CheckSPDU_8" TargetState="PrepareSPDU_6"/>
    <Transition SourceState="PrepareSPDU_6" TargetState="WaitOnResponse_7"/>
    <FSMasterSend_FSAppSend PDout="SD" PortNum="valid" MCount="3" setSD="1" ChFAckReq="0" CRC="valid"
PDin_M="SD" SDset_S="1" ChFAckReq_S="0" DCommErr_S="1" DTimeout_S="0" MCommErr_S="0" MTimeout_S="0"/>
    <FSMasterReceive_FSAppReceive PDin="PD" PortNum="invalid" DCount="4" SDset="0" DCommErr="0" DTimeout="1"
CRC="valid" PDout_M="PD" setSD_C="0" ChFAck_C="0"/>
    <Transition SourceState="WaitOnResponse_7" TargetState="CheckSPDU_8"/>
    <Transition SourceState="CheckSPDU_8" TargetState="PrepareSPDU_6"/>
    <Transition SourceState="PrepareSPDU_6" TargetState="WaitOnResponse_7"/>
    <FSMasterSend_FSAppSend PDout="SD" PortNum="valid" MCount="4" setSD="1" ChFAckReq="0" CRC="valid"
PDin_M="SD" SDset_S="1" ChFAckReq_S="0" DCommErr_S="0" DTimeout_S="1" MCommErr_S="1" MTimeout_S="0"/>
    <FSMasterReceive_FSAppReceive PDin="PD" PortNum="valid" DCount="3" SDset="0" DCommErr="0" DTimeout="0"
CRC="valid" PDout_M="PD" setSD_C="0" ChFAck_C="0"/>
    <Transition SourceState="WaitOnResponse_7" TargetState="CheckSPDU_8"/>
    <Transition SourceState="CheckSPDU_8" TargetState="PrepareSPDU_6"/>
    <Transition SourceState="PrepareSPDU_6" TargetState="WaitOnResponse_7"/>
    <FSMasterSend_FSAppSend PDout="SD" PortNum="valid" MCount="5" setSD="1" ChFAckReq="1" CRC="valid"
PDin_M="SD" SDset_S="1" ChFAckReq_S="1" DCommErr_S="0" DTimeout_S="0" MCommErr_S="0" MTimeout_S="0"/>
    <Transition SourceState="WaitOnResponse_7" TargetState="WaitOnResponse_7"/>
    <FSMasterReceive_FSAppReceive PDin="PD" PortNum="valid" DCount="2" SDset="0" DCommErr="0" DTimeout="0"
CRC="valid" PDout_M="PD" setSD_C="1" ChFAck_C="1"/>
    <Transition SourceState="WaitOnResponse_7" TargetState="CheckSPDU_8"/>
    <Transition SourceState="CheckSPDU_8" TargetState="PrepareSPDU_4"/>
    <Transition SourceState="PrepareSPDU_4" TargetState="WaitOnResponse_5"/>
    <FSMasterSend_FSAppSend PDout="SD" PortNum="valid" MCount="6" setSD="1" ChFAckReq="0" CRC="valid"
PDin_M="SD" SDset_S="1" ChFAckReq_S="0" DCommErr_S="0" DTimeout_S="0" MCommErr_S="0" MTimeout_S="0"/>
    <Transition SourceState="WaitOnResponse_5" TargetState="WaitOnResponse_5"/>
    <FSMasterReceive_FSAppReceive PDin="PD" PortNum="valid" DCount="1" SDset="1" DCommErr="0" DTimeout="0"
CRC="valid" PDout_M="PD" setSD_C="0" ChFAck_C="0"/>
    <Transition SourceState="WaitOnResponse_5" TargetState="CheckSPDU_3"/>
    <Transition SourceState="CheckSPDU_3" TargetState="PrepareSPDU_4"/>
    <Transition SourceState="PrepareSPDU_4" TargetState="WaitOnResponse_5"/>
    <FSMasterSend_FSAppSend PDout="PD" PortNum="valid" MCount="7" setSD="0" ChFAckReq="0" CRC="valid"
PDin_M="SD" SDset_S="1" ChFAckReq_S="0" DCommErr_S="0" DTimeout_S="0" MCommErr_S="0" MTimeout_S="0"/>
    <FSMasterReceive_FSAppReceive PDin="PD" PortNum="valid" DCount="0" SDset="0" DCommErr="0" DTimeout="0"
CRC="invalid" PDout_M="PD" setSD_C="0" ChFAck_C="0"/>
    <Transition SourceState="WaitOnResponse_5" TargetState="CheckSPDU_3"/>
    <Transition SourceState="CheckSPDU_3" TargetState="PrepareSPDU_6"/>
    <Transition SourceState="PrepareSPDU_6" TargetState="WaitOnResponse_7"/>
    <FSMasterSend_FSAppSend PDout="SD" PortNum="valid" MCount="1" setSD="1" ChFAckReq="0" CRC="valid"
PDin_M="SD" SDset_S="1" ChFAckReq_S="0" DCommErr_S="0" DTimeout_S="0" MCommErr_S="1" MTimeout_S="0"/>
  </FSMasterSclTestCaseSteps>
</Testroot>
```

12.2.2 Test script 2

Table 174 defines the test conditions for this test case. The associated XML file contains steps and message parameters for the state flow check in case of a setSD error, MCount = 0, and SDset.

Table 174 – FS-Master test script 2

TEST CASE ATTRIBUTES	IDENTIFICATION / REFERENCE
Identification (ID)	SDCI_FSTC_0165
Name	FSTCM_SCLM_FLOW_SETSD1MC0SDSET1
Purpose (short)	
Equipment under test (EUT)	FS-Master
Test case version	1.0
Category / type	FS-Master automated SCL protocol test
Specification (clause)	[3] clause 11.3.2, Figure 36 (services); clause 11.5.2, Figure 41 (state chart)
Configuration / setup	See Table A.208
TEST CASE	**CONDITIONS / PERFORMANCE**
Purpose (detailed)	Protocol flow in case of distinct error
Precondition	FS-Master to send first message
Procedure	See XML file "IO-Link-Safety_spec_master_final_testsuite_testcase_2.xml"
Test parameter	See Table 172 and XML file
Post condition	–
TEST CASE RESULTS	**CHECK / REACTION**
Evaluation	Comparison of expected and received values according to the XML file
Test passed	Comparison OK
Test failed (examples)	Comparison not OK
Report	Printout of the automated SCL protocol tester <pass/fail>

Content of file "IO-Link-Safety_spec_master_final_testsuite_testcase_2.xml":

```
<?xml version="1.0" encoding="UTF-8"?>
<Testroot xsi:noNamespaceSchemaLocation="IO-Link-Safety-Test-Procedure_Types_V1.0.xsd"
xmlns:xsi="http://www.w3.org/2001/XMLSchema-instance" version="1.2" name="tc_2" date="20.11.2018: 14:01:29.066">
  <FSMasterSclTestCaseSteps>
    <Transition SourceState="Init" TargetState="PrepareSPDU_1"/>
    <Transition SourceState="PrepareSPDU_1" TargetState="WaitOnResponse_2"/>
    <FSMasterSend_FSAppSend PDout="SD" PortNum="valid" MCount="0" setSD="1" ChFAckReq="0" CRC="valid"
PDin_M="SD" SDset_S="1" ChFAckReq_S="0" DCommErr_S="0" DTimeout_S="0" MCommErr_S="0" MTimeout_S="0"/>
    <FSMasterReceive_FSAppReceive PDin="PD" PortNum="valid" DCount="7" SDset="0" DCommErr="0" DTimeout="0"
CRC="valid" PDout_M="PD" setSD_C="0" ChFAck_C="0"/>
    <Transition SourceState="WaitOnResponse_2" TargetState="CheckSPDU_3"/>
    <Transition SourceState="CheckSPDU_3" TargetState="PrepareSPDU_4"/>
    <Transition SourceState="PrepareSPDU_4" TargetState="WaitOnResponse_5"/>
    <FSMasterSend_FSAppSend PDout="PD" PortNum="valid" MCount="1" setSD="0" ChFAckReq="0" CRC="valid"
PDin_M="PD" SDset_S="0" ChFAckReq_S="0" DCommErr_S="0" DTimeout_S="0" MCommErr_S="0" MTimeout_S="0"/>
    <FSMasterReceive_FSAppReceive PDin="PD" PortNum="valid" DCount="6" SDset="1" DCommErr="0" DTimeout="0"
CRC="valid" PDout_M="PD" setSD_C="0" ChFAck_C="0"/>
    <Transition SourceState="WaitOnResponse_5" TargetState="CheckSPDU_3"/>
    <Transition SourceState="CheckSPDU_3" TargetState="PrepareSPDU_4"/>
    <Transition SourceState="PrepareSPDU_4" TargetState="WaitOnResponse_5"/>
    <FSMasterSend_FSAppSend PDout="PD" PortNum="valid" MCount="2" setSD="0" ChFAckReq="0" CRC="valid"
PDin_M="SD" SDset_S="1" ChFAckReq_S="0" DCommErr_S="0" DTimeout_S="0" MCommErr_S="0" MTimeout_S="0"/>
    <FSMasterReceive_FSAppReceive PDin="PD" PortNum="valid" DCount="5" SDset="0" DCommErr="0" DTimeout="0"
CRC="valid" PDout_M="PD" setSD_C="0" ChFAck_C="0"/>
    <Transition SourceState="WaitOnResponse_5" TargetState="CheckSPDU_3"/>
    <Transition SourceState="CheckSPDU_3" TargetState="PrepareSPDU_4"/>
    <Transition SourceState="PrepareSPDU_4" TargetState="WaitOnResponse_5"/>
```

```
    <FSMasterSend_FSAppSend PDout="PD" PortNum="valid" MCount="3" setSD="0" ChFAckReq="0" CRC="valid"
PDin_M="PD" SDset_S="0" ChFAckReq_S="0" DCommErr_S="0" DTimeout_S="0" MCommErr_S="0" MTimeout_S="0"/>
    <FSMasterReceive_FSAppReceive PDin="PD" PortNum="valid" DCount="4" SDset="0" DCommErr="0" DTimeout="0"
CRC="valid" PDout_M="PD" setSD_C="0" ChFAck_C="0"/>
    <Transition SourceState="WaitOnResponse_5" TargetState="CheckSPDU_3"/>
    <Transition SourceState="CheckSPDU_3" TargetState="PrepareSPDU_4"/>
    <Transition SourceState="PrepareSPDU_4" TargetState="WaitOnResponse_5"/>
    <FSMasterSend_FSAppSend PDout="PD" PortNum="valid" MCount="4" setSD="0" ChFAckReq="0" CRC="valid"
PDin_M="PD" SDset_S="0" ChFAckReq_S="0" DCommErr_S="0" DTimeout_S="0" MCommErr_S="0" MTimeout_S="0"/>
    <FSMasterReceive_FSAppReceive PDin="PD" PortNum="valid" DCount="3" SDset="0" DCommErr="0" DTimeout="0"
CRC="valid" PDout_M="PD" setSD_C="0" ChFAck_C="0"/>
    <Transition SourceState="WaitOnResponse_5" TargetState="CheckSPDU_3"/>
    <Transition SourceState="CheckSPDU_3" TargetState="PrepareSPDU_4"/>
    <Transition SourceState="PrepareSPDU_4" TargetState="WaitOnResponse_5"/>
    <FSMasterSend_FSAppSend PDout="PD" PortNum="valid" MCount="5" setSD="0" ChFAckReq="0" CRC="valid"
PDin_M="PD" SDset_S="0" ChFAckReq_S="0" DCommErr_S="0" DTimeout_S="0" MCommErr_S="0" MTimeout_S="0"/>
    <FSMasterReceive_FSAppReceive PDin="PD" PortNum="valid" DCount="0" SDset="0" DCommErr="0" DTimeout="1"
CRC="valid" PDout_M="PD" setSD_C="0" ChFAck_C="0"/>
    <Transition SourceState="WaitOnResponse_5" TargetState="CheckSPDU_3"/>
    <Transition SourceState="CheckSPDU_3" TargetState="PrepareSPDU_6"/>
    <Transition SourceState="PrepareSPDU_6" TargetState="WaitOnResponse_7"/>
    <FSMasterSend_FSAppSend PDout="SD" PortNum="valid" MCount="6" setSD="1" ChFAckReq="0" CRC="valid"
PDin_M="SD" SDset_S="1" ChFAckReq_S="0" DCommErr_S="0" DTimeout_S="1" MCommErr_S="1" MTimeout_S="0"/>
  </FSMasterSclTestCaseSteps>
</Testroot>
```

12.2.3 Test script 3

Table 175 defines the test conditions for this test case. The associated XML file contains steps and message parameters for the state flow check in case of a setSD error, MCount = 0, and ChannelFailureAck =1.

Table 175 – FS-Master test script 3

TEST CASE ATTRIBUTES	IDENTIFICATION / REFERENCE
Identification (ID)	SDCI_FSTC_0166
Name	FSTCM_SCLM_FLOW_SETSD1MC0CFAC1
Purpose (short)	
Equipment under test (EUT)	FS-Master
Test case version	1.1
Category / type	FS-Master automated SCL protocol test
Specification (clause)	[3] clause 11.3.2, Figure 36 (services); clause 11.5.2, Figure 41 (state chart)
Configuration / setup	See Table A.208

TEST CASE	CONDITIONS / PERFORMANCE
Purpose (detailed)	Protocol flow in case of distinct error
Precondition	FS-Master to send first message
Procedure	See XML file "IO-Link-Safety_spec_master_final_testsuite_testcase_3.xml"
Test parameter	See Table 172 and XML file
Post condition	–

TEST CASE RESULTS	CHECK / REACTION
Evaluation	Comparison of expected and received values according to the XML file
Test passed	Comparison OK
Test failed (examples)	Comparison not OK
Report	Printout of the automated SCL protocol tester <pass/fail>

Content of file "IO-Link-Safety_spec_master_final_testsuite_testcase_3.xml":

```
<?xml version="1.0" encoding="UTF-8"?>
<Testroot xsi:noNamespaceSchemaLocation="IO-Link-Safety-Test-Procedure_Types_V1.0.xsd"
xmlns:xsi="http://www.w3.org/2001/XMLSchema-instance" version="1.2" name="tc_3" date="20.11.2018: 14:01:29.067">
  <FSMasterSclTestCaseSteps>
    <Transition SourceState="Init" TargetState="PrepareSPDU_1"/>
    <Transition SourceState="PrepareSPDU_1" TargetState="WaitOnResponse_2"/>
    <FSMasterSend_FSAppSend PDout="SD" PortNum="valid" MCount="0" setSD="1" ChFAckReq="0" CRC="valid"
PDin_M="SD" SDset_S="1" ChFAckReq_S="0" DCommErr_S="0" DTimeout_S="0" MCommErr_S="0" MTimeout_S="0"/>
    <Transition SourceState="WaitOnResponse_2" TargetState="WaitOnResponse_2"/>
    <FSMasterReceive_FSAppReceive PDin="PD" PortNum="valid" DCount="7" SDset="1" DCommErr="0" DTimeout="0"
CRC="valid" PDout_M="PD" setSD_C="0" ChFAck_C="1"/>
    <Transition SourceState="WaitOnResponse_2" TargetState="CheckSPDU_3"/>
    <Transition SourceState="CheckSPDU_3" TargetState="PrepareSPDU_4"/>
    <Transition SourceState="PrepareSPDU_4" TargetState="WaitOnResponse_5"/>
    <FSMasterSend_FSAppSend PDout="PD" PortNum="valid" MCount="1" setSD="0" ChFAckReq="0" CRC="valid"
PDin_M="SD" SDset_S="1" ChFAckReq_S="0" DCommErr_S="0" DTimeout_S="0" MCommErr_S="0" MTimeout_S="0"/>

    <FSMasterReceive_FSAppReceive PDin="PD" PortNum="valid" DCount="6" SDset="1" DCommErr="0" DTimeout="0"
CRC="valid" PDout_M="PD" setSD_C="0" ChFAck_C="1"/>
    <Transition SourceState="WaitOnResponse_2" TargetState="CheckSPDU_3"/>
    <Transition SourceState="CheckSPDU_3" TargetState="PrepareSPDU_4"/>
    <Transition SourceState="PrepareSPDU_4" TargetState="WaitOnResponse_5"/>
    <FSMasterSend_FSAppSend PDout="PD" PortNum="valid" MCount="2" setSD="0" ChFAckReq="0" CRC="valid"
PDin_M="SD" SDset_S="1" ChFAckReq_S="0" DCommErr_S="0" DTimeout_S="0" MCommErr_S="0" MTimeout_S="0"/>

    <Timeout/>
    <Transition SourceState="WaitOnResponse_5" TargetState="PrepareSPDU_6"/>
    <Transition SourceState="PrepareSPDU_6" TargetState="WaitOnResponse_7"/>
```

```
    <FSMasterSend_FSAppSend PDout="SD" PortNum="valid" MCount="0" setSD="1" ChFAckReq="0" CRC="valid"
PDin_M="SD" SDset_S="1" ChFAckReq_S="0" DCommErr_S="0" DTimeout_S="0" MCommErr_S="0" MTimeout_S="1"/>
    <FSMasterReceive_FSAppReceive PDin="PD" PortNum="valid" DCount="7" SDset="0" DCommErr="0" DTimeout="0"
CRC="valid" PDout_M="PD" setSD_C="0" ChFAck_C="1"/>
    <Transition SourceState="WaitOnResponse_7" TargetState="CheckSPDU_8"/>
    <Transition SourceState="CheckSPDU_8" TargetState="PrepareSPDU_6"/>
    <Transition SourceState="PrepareSPDU_6" TargetState="WaitOnResponse_7"/>
    <FSMasterSend_FSAppSend PDout="SD" PortNum="valid" MCount="1" setSD="1" ChFAckReq="1" CRC="valid"
PDin_M="SD" SDset_S="1" ChFAckReq_S="1" DCommErr_S="0" DTimeout_S="0" MCommErr_S="0" MTimeout_S="0"/>
    <FSMasterReceive_FSAppReceive PDin="PD" PortNum="valid" DCount="6" SDset="0" DCommErr="0" DTimeout="0"
CRC="invalid" PDout_M="PD" setSD_C="0" ChFAck_C="1"/>
    <Transition SourceState="WaitOnResponse_7" TargetState="CheckSPDU_8"/>
    <Transition SourceState="CheckSPDU_8" TargetState="PrepareSPDU_6"/>
    <Transition SourceState="PrepareSPDU_6" TargetState="WaitOnResponse_7"/>
    <FSMasterSend_FSAppSend PDout="SD" PortNum="valid" MCount="2" setSD="1" ChFAckReq="0" CRC="valid"
PDin_M="SD" SDset_S="1" ChFAckReq_S="0" DCommErr_S="0" DTimeout_S="0" MCommErr_S="1" MTimeout_S="0"/>
    <FSMasterReceive_FSAppReceive PDin="PD" PortNum="valid" DCount="5" SDset="0" DCommErr="1" DTimeout="0"
CRC="valid" PDout_M="PD" setSD_C="0" ChFAck_C="1"/>
    <Transition SourceState="WaitOnResponse_7" TargetState="CheckSPDU_8"/>
    <Transition SourceState="CheckSPDU_8" TargetState="PrepareSPDU_6"/>
    <Transition SourceState="PrepareSPDU_6" TargetState="WaitOnResponse_7"/>
    <FSMasterSend_FSAppSend PDout="SD" PortNum="valid" MCount="3" setSD="1" ChFAckReq="0" CRC="valid"
PDin_M="SD" SDset_S="1" ChFAckReq_S="0" DCommErr_S="1" DTimeout_S="0" MCommErr_S="0" MTimeout_S="0"/>
    <Timeout/>
    <Transition SourceState="WaitOnResponse_7" TargetState="PrepareSPDU_6"/>
    <Transition SourceState="PrepareSPDU_6" TargetState="WaitOnResponse_7"/>
    <FSMasterSend_FSAppSend PDout="SD" PortNum="valid" MCount="0" setSD="1" ChFAckReq="0" CRC="valid"
PDin_M="SD" SDset_S="1" ChFAckReq_S="0" DCommErr_S="1" DTimeout_S="0" MCommErr_S="0" MTimeout_S="1"/>
    <FSMasterReceive_FSAppReceive PDin="PD" PortNum="valid" DCount="0" SDset="0" DCommErr="0" DTimeout="0"
CRC="valid" PDout_M="PD" setSD_C="0" ChFAck_C="1"/>
    <Transition SourceState="WaitOnResponse_7" TargetState="WaitOnResponse_7"/>
  </FSMasterSclTestCaseSteps>
</Testroot>
```

12.2.4 Test script 4

Table 176 defines the test conditions for this test case. The associated XML file contains steps and message parameters for the state flow check in case of a setSD error, MCount = 0, and DCommErr.

Table 176 – FS-Master test script 4

TEST CASE ATTRIBUTES	IDENTIFICATION / REFERENCE
Identification (ID)	SDCI_FSTC_0167
Name	FSTCM_SCLM_FLOW_SETSD1MC0DCE1
Purpose (short)	
Equipment under test (EUT)	FS-Master
Test case version	1.0
Category / type	FS-Master automated SCL protocol test
Specification (clause)	[3] clause 11.3.2, Figure 36 (services); clause 11.5.2, Figure 41 (state chart)
Configuration / setup	See Table A.208
TEST CASE	**CONDITIONS / PERFORMANCE**
Purpose (detailed)	Protocol flow in case of distinct error
Precondition	FS-Master to send first message
Procedure	See XML file "IO-Link-Safety_spec_master_final_testsuite_testcase_4.xml"
Test parameter	See Table 172 and XML file
Post condition	–
TEST CASE RESULTS	**CHECK / REACTION**
Evaluation	Comparison of expected and received values according to the XML file
Test passed	Comparison OK
Test failed (examples)	Comparison not OK
Report	Printout of the automated SCL protocol tester <pass/fail>

Content of file "IO-Link-Safety_spec_master_final_testsuite_testcase_4.xml":

```
<?xml version="1.0" encoding="UTF-8"?>
<Testroot xsi:noNamespaceSchemaLocation="IO-Link-Safety-Test-Procedure_Types_V1.0.xsd"
xmlns:xsi="http://www.w3.org/2001/XMLSchema-instance" version="1.2" name="tc_4" date="20.11.2018: 14:01:29.067">
  <FSMasterSclTestCaseSteps>
    <Transition SourceState="Init" TargetState="PrepareSPDU_1"/>
    <Transition SourceState="PrepareSPDU_1" TargetState="WaitOnResponse_2"/>
    <FSMasterSend_FSAppSend PDout="SD" PortNum="valid" MCount="0" setSD="1" ChFAckReq="0" CRC="valid"
PDin_M="SD" SDset_S="1" ChFAckReq_S="0" DCommErr_S="0" DTimeout_S="0" MCommErr_S="0" MTimeout_S="0"/>
    <FSMasterReceive_FSAppReceive PDin="PD" PortNum="valid" DCount="7" SDset="0" DCommErr="1" DTimeout="0"
CRC="valid" PDout_M="PD" setSD_C="0" ChFAck_C="0"/>
    <Transition SourceState="WaitOnResponse_2" TargetState="CheckSPDU_3"/>
    <Transition SourceState="CheckSPDU_3" TargetState="PrepareSPDU_6"/>
    <Transition SourceState="PrepareSPDU_6" TargetState="WaitOnResponse_7"/>
    <FSMasterSend_FSAppSend PDout="SD" PortNum="valid" MCount="1" setSD="1" ChFAckReq="0" CRC="valid"
PDin_M="SD" SDset_S="1" ChFAckReq_S="0" DCommErr_S="1" DTimeout_S="0" MCommErr_S="0" MTimeout_S="0"/>
    <FSMasterReceive_FSAppReceive PDin="PD" PortNum="valid" DCount="6" SDset="0" DCommErr="0" DTimeout="0"
CRC="invalid" PDout_M="PD" setSD_C="0" ChFAck_C="0"/>
    <Transition SourceState="WaitOnResponse_7" TargetState="CheckSPDU_8"/>
    <Transition SourceState="CheckSPDU_8" TargetState="PrepareSPDU_6"/>
    <Transition SourceState="PrepareSPDU_6" TargetState="WaitOnResponse_7"/>
    <FSMasterSend_FSAppSend PDout="SD" PortNum="valid" MCount="2" setSD="1" ChFAckReq="0" CRC="valid"
PDin_M="SD" SDset_S="1" ChFAckReq_S="0" DCommErr_S="0" DTimeout_S="0" MCommErr_S="1" MTimeout_S="0"/>
    <FSMasterReceive_FSAppReceive PDin="PD" PortNum="valid" DCount="5" SDset="0" DCommErr="1" DTimeout="0"
CRC="valid" PDout_M="PD" setSD_C="0" ChFAck_C="0"/>
    <Transition SourceState="WaitOnResponse_7" TargetState="CheckSPDU_8"/>
    <Transition SourceState="CheckSPDU_8" TargetState="PrepareSPDU_6"/>
    <Transition SourceState="PrepareSPDU_6" TargetState="WaitOnResponse_7"/>
```

```
    <FSMasterSend_FSAppSend PDout="SD" PortNum="valid" MCount="3" setSD="1" ChFAckReq="0" CRC="valid"
PDin_M="SD" SDset_S="1" ChFAckReq_S="0" DCommErr_S="1" DTimeout_S="0" MCommErr_S="0" MTimeout_S="0"/>
    <FSMasterReceive_FSAppReceive PDin="PD" PortNum="invalid" DCount="4" SDset="0" DCommErr="0" DTimeout="1"
CRC="valid" PDout_M="PD" setSD_C="0" ChFAck_C="0"/>
    <Transition SourceState="WaitOnResponse_7" TargetState="CheckSPDU_8"/>
    <Transition SourceState="CheckSPDU_8" TargetState="PrepareSPDU_6"/>
    <Transition SourceState="PrepareSPDU_6" TargetState="WaitOnResponse_7"/>
    <FSMasterSend_FSAppSend PDout="SD" PortNum="valid" MCount="4" setSD="1" ChFAckReq="0" CRC="valid"
PDin_M="SD" SDset_S="1" ChFAckReq_S="0" DCommErr_S="0" DTimeout_S="1" MCommErr_S="1" MTimeout_S="0"/>
    <FSMasterReceive_FSAppReceive PDin="PD" PortNum="invalid" DCount="3" SDset="0" DCommErr="0" DTimeout="1"
CRC="valid" PDout_M="PD" setSD_C="0" ChFAck_C="0"/>
    <Transition SourceState="WaitOnResponse_7" TargetState="CheckSPDU_8"/>
    <Transition SourceState="CheckSPDU_8" TargetState="PrepareSPDU_6"/>
    <Transition SourceState="PrepareSPDU_6" TargetState="WaitOnResponse_7"/>
    <FSMasterSend_FSAppSend PDout="SD" PortNum="valid" MCount="5" setSD="1" ChFAckReq="0" CRC="valid"
PDin_M="SD" SDset_S="1" ChFAckReq_S="0" DCommErr_S="0" DTimeout_S="1" MCommErr_S="1" MTimeout_S="0"/>
    <FSMasterReceive_FSAppReceive PDin="PD" PortNum="invalid" DCount="2" SDset="0" DCommErr="0" DTimeout="1"
CRC="valid" PDout_M="PD" setSD_C="0" ChFAck_C="0"/>
    <Transition SourceState="WaitOnResponse_7" TargetState="CheckSPDU_8"/>
    <Transition SourceState="CheckSPDU_8" TargetState="PrepareSPDU_6"/>
    <Transition SourceState="PrepareSPDU_6" TargetState="WaitOnResponse_7"/>
    <FSMasterSend_FSAppSend PDout="SD" PortNum="valid" MCount="6" setSD="1" ChFAckReq="0" CRC="valid"
PDin_M="SD" SDset_S="1" ChFAckReq_S="0" DCommErr_S="0" DTimeout_S="1" MCommErr_S="1" MTimeout_S="0"/>
    <FSMasterReceive_FSAppReceive PDin="PD" PortNum="valid" DCount="1" SDset="0" DCommErr="0" DTimeout="0"
CRC="valid" PDout_M="PD" setSD_C="0" ChFAck_C="0"/>
    <Transition SourceState="WaitOnResponse_7" TargetState="CheckSPDU_8"/>
    <Transition SourceState="CheckSPDU_8" TargetState="PrepareSPDU_6"/>
    <Transition SourceState="PrepareSPDU_6" TargetState="WaitOnResponse_7"/>
    <FSMasterSend_FSAppSend PDout="SD" PortNum="valid" MCount="7" setSD="1" ChFAckReq="1" CRC="valid"
PDin_M="SD" SDset_S="1" ChFAckReq_S="1" DCommErr_S="0" DTimeout_S="0" MCommErr_S="0" MTimeout_S="0"/>
    <Transition SourceState="WaitOnResponse_7" TargetState="WaitOnResponse_7"/>
    <FSMasterReceive_FSAppReceive PDin="PD" PortNum="valid" DCount="0" SDset="0" DCommErr="0" DTimeout="0"
CRC="valid" PDout_M="PD" setSD_C="1" ChFAck_C="1"/>
    <Transition SourceState="WaitOnResponse_7" TargetState="CheckSPDU_8"/>
    <Transition SourceState="CheckSPDU_8" TargetState="PrepareSPDU_4"/>
    <Transition SourceState="PrepareSPDU_4" TargetState="WaitOnResponse_5"/>
    <FSMasterSend_FSAppSend PDout="SD" PortNum="valid" MCount="1" setSD="1" ChFAckReq="0" CRC="valid"
PDin_M="SD" SDset_S="1" ChFAckReq_S="0" DCommErr_S="0" DTimeout_S="0" MCommErr_S="0" MTimeout_S="0"/>
    <FSMasterReceive_FSAppReceive PDin="PD" PortNum="valid" DCount="0" SDset="0" DCommErr="0" DTimeout="0"
CRC="valid" PDout_M="PD" setSD_C="1" ChFAck_C="1"/>
    <Transition SourceState="WaitOnResponse_5" TargetState="WaitOnResponse_5"/>
  </FSMasterSclTestCaseSteps>
</Testroot>
```

12.2.5 Test script 5

Table 177 defines the test conditions for this test case. The associated XML file contains steps and message parameters for the state flow check in case of setSD error, MCount = 0, and DCommErr.

Table 177 – FS-Master test script 5

TEST CASE ATTRIBUTES	IDENTIFICATION / REFERENCE
Identification (ID)	SDCI_FSTC_0168
Name	FSTCM_SCLM_FLOW_SETSD1MC0DCE1
Purpose (short)	
Equipment under test (EUT)	FS-Master
Test case version	1.0
Category / type	FS-Master automated SCL protocol test
Specification (clause)	[3] clause 11.3.2, Figure 36 (services); clause 11.5.2, Figure 41 (state chart)
Configuration / setup	See Table A.208
TEST CASE	**CONDITIONS / PERFORMANCE**
Purpose (detailed)	Protocol flow in case of distinct error
Precondition	FS-Master to send first message
Procedure	See XML file "IO-Link-Safety_spec_master_final_testsuite_testcase_5.xml"
Test parameter	See Table 172 and XML file
Post condition	–
TEST CASE RESULTS	**CHECK / REACTION**
Evaluation	Comparison of expected and received values according to the XML file
Test passed	Comparison OK
Test failed (examples)	Comparison not OK
Report	Printout of the automated SCL protocol tester <pass/fail>

Content of file "IO-Link-Safety_spec_master_final_testsuite_testcase_5.xml":

```
<?xml version="1.0" encoding="UTF-8"?>
<Testroot xsi:noNamespaceSchemaLocation="IO-Link-Safety-Test-Procedure_Types_V1.0.xsd"
xmlns:xsi="http://www.w3.org/2001/XMLSchema-instance" version="1.2" name="tc_5" date="20.11.2018: 14:01:29.067">
  <FSMasterSclTestCaseSteps>
    <Transition SourceState="Init" TargetState="PrepareSPDU_1"/>
    <Transition SourceState="PrepareSPDU_1" TargetState="WaitOnResponse_2"/>
    <FSMasterSend_FSAppSend PDout="SD" PortNum="valid" MCount="0" setSD="1" ChFAckReq="0" CRC="valid"
PDin_M="SD" SDset_S="1" ChFAckReq_S="0" DCommErr_S="0" DTimeout_S="0" MCommErr_S="0" MTimeout_S="0"/>
    <FSMasterReceive_FSAppReceive PDin="PD" PortNum="valid" DCount="0" SDset="0" DCommErr="1" DTimeout="0"
CRC="valid" PDout_M="PD" setSD_C="0" ChFAck_C="0"/>
    <Transition SourceState="WaitOnResponse_2" TargetState="CheckSPDU_3"/>
    <Transition SourceState="CheckSPDU_3" TargetState="PrepareSPDU_6"/>
    <Transition SourceState="PrepareSPDU_6" TargetState="WaitOnResponse_7"/>
    <FSMasterSend_FSAppSend PDout="SD" PortNum="valid" MCount="1" setSD="1" ChFAckReq="0" CRC="valid"
PDin_M="SD" SDset_S="1" ChFAckReq_S="0" DCommErr_S="1" DTimeout_S="0" MCommErr_S="1" MTimeout_S="0"/>
    <FSMasterReceive_FSAppReceive PDin="PD" PortNum="valid" DCount="7" SDset="0" DCommErr="0" DTimeout="0"
CRC="valid" PDout_M="PD" setSD_C="0" ChFAck_C="0"/>
    <Transition SourceState="WaitOnResponse_7" TargetState="WaitOnResponse_7"/>
  </FSMasterSclTestCaseSteps>
</Testroot>
```

12.2.6 Test script 6

Table 178 defines the test conditions for this test case. The associated XML file contains steps and message parameters for the state flow check in case of setSD =1, MCount =0, and DCommErr.

Table 178 – FS-Master test script 6

TEST CASE ATTRIBUTES	IDENTIFICATION / REFERENCE
Identification (ID)	SDCI_FSTC_0169
Name	FSTCM_SCLM_FLOW_SETSD1MC0DCE1
Purpose (short)	
Equipment under test (EUT)	FS-Master
Test case version	1.0
Category / type	FS-Master automated SCL protocol test
Specification (clause)	[3] clause 11.3.2, Figure 36 (services); clause 11.5.2, Figure 41 (state chart)
Configuration / setup	See Table A.208
TEST CASE	**CONDITIONS / PERFORMANCE**
Purpose (detailed)	Protocol flow in case of distinct error
Precondition	FS-Master to send first message
Procedure	See XML file "IO-Link-Safety_spec_master_final_testsuite_testcase_6.xml"
Test parameter	See Table 172 and XML file
Post condition	–
TEST CASE RESULTS	**CHECK / REACTION**
Evaluation	Comparison of expected and received values according to the XML file
Test passed	Comparison OK
Test failed (examples)	Comparison not OK
Report	Printout of the automated SCL protocol tester <pass/fail>

Content of file "IO-Link-Safety_spec_master_final_testsuite_testcase_6.xml":

```xml
<?xml version="1.0" encoding="UTF-8"?>
<Testroot xsi:noNamespaceSchemaLocation="IO-Link-Safety-Test-Procedure_Types_V1.0.xsd"
xmlns:xsi="http://www.w3.org/2001/XMLSchema-instance" version="1.2" name="tc_6" date="20.11.2018: 14:01:29.067">
  <FSMasterSclTestCaseSteps>
    <Transition SourceState="Init" TargetState="PrepareSPDU_1"/>
    <Transition SourceState="PrepareSPDU_1" TargetState="WaitOnResponse_2"/>
    <FSMasterSend_FSAppSend PDout="SD" PortNum="valid" MCount="0" setSD="1" ChFAckReq="0" CRC="valid"
PDin_M="SD" SDset_S="1" ChFAckReq_S="0" DCommErr_S="0" DTimeout_S="0" MCommErr_S="0" MTimeout_S="0"/>
    <FSMasterReceive_FSAppReceive PDin="PD" PortNum="valid" DCount="7" SDset="0" DCommErr="1" DTimeout="0"
CRC="valid" PDout_M="PD" setSD_C="0" ChFAck_C="0"/>
    <Transition SourceState="WaitOnResponse_2" TargetState="CheckSPDU_3"/>
    <Transition SourceState="CheckSPDU_3" TargetState="PrepareSPDU_6"/>
    <Transition SourceState="PrepareSPDU_6" TargetState="WaitOnResponse_7"/>
    <FSMasterSend_FSAppSend PDout="SD" PortNum="valid" MCount="1" setSD="1" ChFAckReq="0" CRC="valid"
PDin_M="SD" SDset_S="1" ChFAckReq_S="0" DCommErr_S="1" DTimeout_S="0" MCommErr_S="0" MTimeout_S="0"/>
    <FSMasterReceive_FSAppReceive PDin="PD" PortNum="valid" DCount="6" SDset="0" DCommErr="0" DTimeout="0"
CRC="valid" PDout_M="PD" setSD_C="0" ChFAck_C="0"/>
    <Transition SourceState="WaitOnResponse_7" TargetState="CheckSPDU_8"/>
    <Transition SourceState="CheckSPDU_8" TargetState="PrepareSPDU_6"/>
    <Transition SourceState="PrepareSPDU_6" TargetState="WaitOnResponse_7"/>
    <FSMasterSend_FSAppSend PDout="SD" PortNum="valid" MCount="2" setSD="1" ChFAckReq="1" CRC="valid"
PDin_M="SD" SDset_S="1" ChFAckReq_S="1" DCommErr_S="0" DTimeout_S="0" MCommErr_S="0" MTimeout_S="0"/>
    <Transition SourceState="WaitOnResponse_7" TargetState="WaitOnResponse_7"/>
    <FSMasterReceive_FSAppReceive PDin="PD" PortNum="valid" DCount="5" SDset="0" DCommErr="0" DTimeout="0"
CRC="valid" PDout_M="PD" setSD_C="0" ChFAck_C="1"/>
    <Transition SourceState="WaitOnResponse_7" TargetState="CheckSPDU_8"/>
    <Transition SourceState="CheckSPDU_8" TargetState="PrepareSPDU_4"/>
    <Transition SourceState="PrepareSPDU_4" TargetState="WaitOnResponse_5"/>
```

```
    <FSMasterSend_FSAppSend PDout="PD" PortNum="valid" MCount="3" setSD="0" ChFAckReq="0" CRC="valid"
PDin_M="PD" SDset_S="0" ChFAckReq_S="0" DCommErr_S="0" DTimeout_S="0" MCommErr_S="0" MTimeout_S="0"/>
    <FSMasterReceive_FSAppReceive PDin="PD" PortNum="valid" DCount="6" SDset="0" DCommErr="0" DTimeout="0"
CRC="valid" PDout_M="PD" setSD_C="0" ChFAck_C="1"/>
    <Transition SourceState="WaitOnResponse_5" TargetState="CheckSPDU_3"/>
    <Transition SourceState="CheckSPDU_3" TargetState="PrepareSPDU_6"/>
    <Transition SourceState="PrepareSPDU_6" TargetState="WaitOnResponse_7"/>
    <FSMasterSend_FSAppSend PDout="SD" PortNum="valid" MCount="4" setSD="1" ChFAckReq="0" CRC="valid"
PDin_M="SD" SDset_S="1" ChFAckReq_S="0" DCommErr_S="0" DTimeout_S="0" MCommErr_S="1" MTimeout_S="0"/>
  </FSMasterSclTestCaseSteps>
</Testroot>
```

12.2.7 Test script 7

Table 179 defines the test conditions for this test case. The associated XML file contains steps and message parameters for the state flow check in case of setSD =1, MCount =0, and DCommErr.

Table 179 – FS-Master test script 7

TEST CASE ATTRIBUTES	IDENTIFICATION / REFERENCE
Identification (ID)	SDCI_FSTC_0170
Name	FSTCM_SCLM_FLOW_SETSD1MC0DCE1
Purpose (short)	
Equipment under test (EUT)	FS-Master
Test case version	1.0
Category / type	FS-Master automated SCL protocol test
Specification (clause)	[3] clause 11.3.2, Figure 36 (services); clause 11.5.2, Figure 41 (state chart)
Configuration / setup	See Table A.208
TEST CASE	**CONDITIONS / PERFORMANCE**
Purpose (detailed)	Protocol flow in case of distinct error
Precondition	FS-Master to send first message
Procedure	See XML file "IO-Link-Safety_spec_master_final_testsuite_testcase_7.xml"
Test parameter	See Table 172 and XML file
Post condition	–
TEST CASE RESULTS	**CHECK / REACTION**
Evaluation	Comparison of expected and received values according to the XML file
Test passed	Comparison OK
Test failed (examples)	Comparison not OK
Report	Printout of the automated SCL protocol tester <pass/fail>

Content of file "IO-Link-Safety_spec_master_final_testsuite_testcase_7.xml":

```
<?xml version="1.0" encoding="UTF-8"?>
<Testroot xsi:noNamespaceSchemaLocation="IO-Link-Safety-Test-Procedure_Types_V1.0.xsd"
xmlns:xsi="http://www.w3.org/2001/XMLSchema-instance" version="1.2" name="tc_7" date="20.11.2018: 14:01:29.067">
  <FSMasterSclTestCaseSteps>
    <Transition SourceState="Init" TargetState="PrepareSPDU_1"/>
    <Transition SourceState="PrepareSPDU_1" TargetState="WaitOnResponse_2"/>
    <FSMasterSend_FSAppSend PDout="SD" PortNum="valid" MCount="0" setSD="1" ChFAckReq="0" CRC="valid"
PDin_M="SD" SDset_S="1" ChFAckReq_S="0" DCommErr_S="0" DTimeout_S="0" MCommErr_S="0" MTimeout_S="0"/>
    <FSMasterReceive_FSAppReceive PDin="PD" PortNum="valid" DCount="7" SDset="0" DCommErr="1" DTimeout="0"
CRC="valid" PDout_M="PD" setSD_C="0" ChFAck_C="0"/>
    <Transition SourceState="WaitOnResponse_2" TargetState="CheckSPDU_3"/>
    <Transition SourceState="CheckSPDU_3" TargetState="PrepareSPDU_6"/>
    <Transition SourceState="PrepareSPDU_6" TargetState="WaitOnResponse_7"/>
    <FSMasterSend_FSAppSend PDout="SD" PortNum="valid" MCount="1" setSD="1" ChFAckReq="0" CRC="valid"
PDin_M="SD" SDset_S="1" ChFAckReq_S="0" DCommErr_S="1" DTimeout_S="0" MCommErr_S="0" MTimeout_S="0"/>
    <FSMasterReceive_FSAppReceive PDin="PD" PortNum="valid" DCount="6" SDset="0" DCommErr="0" DTimeout="0"
CRC="valid" PDout_M="PD" setSD_C="0" ChFAck_C="0"/>
    <Transition SourceState="WaitOnResponse_7" TargetState="CheckSPDU_8"/>
    <Transition SourceState="CheckSPDU_8" TargetState="PrepareSPDU_6"/>
    <Transition SourceState="PrepareSPDU_6" TargetState="WaitOnResponse_7"/>
    <FSMasterSend_FSAppSend PDout="SD" PortNum="valid" MCount="2" setSD="1" ChFAckReq="1" CRC="valid"
PDin_M="SD" SDset_S="1" ChFAckReq_S="1" DCommErr_S="0" DTimeout_S="0" MCommErr_S="0" MTimeout_S="0"/>
    <Transition SourceState="WaitOnResponse_7" TargetState="WaitOnResponse_7"/>
    <FSMasterReceive_FSAppReceive PDin="PD" PortNum="valid" DCount="5" SDset="0" DCommErr="0" DTimeout="0"
CRC="valid" PDout_M="PD" setSD_C="0" ChFAck_C="1"/>
    <Transition SourceState="WaitOnResponse_7" TargetState="CheckSPDU_8"/>
    <Transition SourceState="CheckSPDU_8" TargetState="PrepareSPDU_4"/>
    <Transition SourceState="PrepareSPDU_4" TargetState="WaitOnResponse_5"/>
```

```
    <FSMasterSend_FSAppSend PDout="PD" PortNum="valid" MCount="3" setSD="0" ChFAckReq="0" CRC="valid"
PDin_M="PD" SDset_S="0" ChFAckReq_S="0" DCommErr_S="0" DTimeout_S="0" MCommErr_S="0" MTimeout_S="0"/>
    <FSMasterReceive_FSAppReceive PDin="PD" PortNum="valid" DCount="6" SDset="0" DCommErr="0" DTimeout="0"
CRC="invalid" PDout_M="PD" setSD_C="0" ChFAck_C="1"/>
    <Transition SourceState="WaitOnResponse_5" TargetState="CheckSPDU_3"/>
    <Transition SourceState="CheckSPDU_3" TargetState="PrepareSPDU_6"/>
    <Transition SourceState="PrepareSPDU_6" TargetState="WaitOnResponse_7"/>
    <FSMasterSend_FSAppSend PDout="SD" PortNum="valid" MCount="4" setSD="1" ChFAckReq="0" CRC="valid"
PDin_M="SD" SDset_S="1" ChFAckReq_S="0" DCommErr_S="0" DTimeout_S="0" MCommErr_S="1" MTimeout_S="0"/>
  </FSMasterSclTestCaseSteps>
</Testroot>
```

12.2.8 Test script 8

Table 180 defines the test conditions for this test case. The associated XML file contains steps and message parameters for the state flow check in case of setSD =1, MCount =0, DCommErr, and PortNumber error.

Table 180 – FS-Master test script 8

TEST CASE ATTRIBUTES	IDENTIFICATION / REFERENCE
Identification (ID)	SDCI_FSTC_0171
Name	FSTCM_SCLM_FLOW_SETSD1MC0DCE1PNERR
Purpose (short)	
Equipment under test (EUT)	FS-Master
Test case version	1.0
Category / type	FS-Master automated SCL protocol test
Specification (clause)	[3] clause 11.3.2, Figure 36 (services); clause 11.5.2, Figure 41 (state chart)
Configuration / setup	See Table A.208

TEST CASE	CONDITIONS / PERFORMANCE
Purpose (detailed)	Protocol flow in case of distinct error
Precondition	FS-Master to send first message
Procedure	See XML file "IO-Link-Safety_spec_master_final_testsuite_testcase_8.xml"
Test parameter	See Table 172 and XML file
Post condition	–

TEST CASE RESULTS	CHECK / REACTION
Evaluation	Comparison of expected and received values according to the XML file
Test passed	Comparison OK
Test failed (examples)	Comparison not OK
Report	Printout of the automated SCL protocol tester <pass/fail>

Content of file "IO-Link-Safety_spec_master_final_testsuite_testcase_8.xml":

```
<?xml version="1.0" encoding="UTF-8"?>
<Testroot xsi:noNamespaceSchemaLocation="IO-Link-Safety-Test-Procedure_Types_V1.0.xsd"
xmlns:xsi="http://www.w3.org/2001/XMLSchema-instance" version="1.2" name="tc_8" date="20.11.2018: 14:01:29.068">
  <FSMasterSclTestCaseSteps>
    <Transition SourceState="Init" TargetState="PrepareSPDU_1"/>
    <Transition SourceState="PrepareSPDU_1" TargetState="WaitOnResponse_2"/>
    <FSMasterSend_FSAppSend PDout="SD" PortNum="valid" MCount="0" setSD="1" ChFAckReq="0" CRC="valid"
PDin_M="SD" SDset_S="1" ChFAckReq_S="0" DCommErr_S="0" DTimeout_S="0" MCommErr_S="0" MTimeout_S="0"/>
    <FSMasterReceive_FSAppReceive PDin="PD" PortNum="valid" DCount="7" SDset="0" DCommErr="1" DTimeout="0"
CRC="valid" PDout_M="PD" setSD_C="0" ChFAck_C="0"/>
    <Transition SourceState="WaitOnResponse_2" TargetState="CheckSPDU_3"/>
    <Transition SourceState="CheckSPDU_3" TargetState="PrepareSPDU_6"/>
    <Transition SourceState="PrepareSPDU_6" TargetState="WaitOnResponse_7"/>
    <FSMasterSend_FSAppSend PDout="SD" PortNum="valid" MCount="1" setSD="1" ChFAckReq="0" CRC="valid"
PDin_M="SD" SDset_S="1" ChFAckReq_S="0" DCommErr_S="1" DTimeout_S="0" MCommErr_S="0" MTimeout_S="0"/>
    <FSMasterReceive_FSAppReceive PDin="PD" PortNum="valid" DCount="6" SDset="0" DCommErr="0" DTimeout="0"
CRC="valid" PDout_M="PD" setSD_C="0" ChFAck_C="0"/>
    <Transition SourceState="WaitOnResponse_7" TargetState="CheckSPDU_8"/>
    <Transition SourceState="CheckSPDU_8" TargetState="PrepareSPDU_6"/>
    <Transition SourceState="PrepareSPDU_6" TargetState="WaitOnResponse_7"/>
    <FSMasterSend_FSAppSend PDout="SD" PortNum="valid" MCount="2" setSD="1" ChFAckReq="1" CRC="valid"
PDin_M="SD" SDset_S="1" ChFAckReq_S="1" DCommErr_S="0" DTimeout_S="0" MCommErr_S="0" MTimeout_S="0"/>
    <Transition SourceState="WaitOnResponse_7" TargetState="WaitOnResponse_7"/>
    <FSMasterReceive_FSAppReceive PDin="PD" PortNum="valid" DCount="5" SDset="0" DCommErr="0" DTimeout="0"
CRC="valid" PDout_M="PD" setSD_C="0" ChFAck_C="1"/>
    <Transition SourceState="WaitOnResponse_7" TargetState="CheckSPDU_8"/>
    <Transition SourceState="CheckSPDU_8" TargetState="PrepareSPDU_4"/>
    <Transition SourceState="PrepareSPDU_4" TargetState="WaitOnResponse_5"/>
```

```
    <FSMasterSend_FSAppSend PDout="PD" PortNum="valid" MCount="3" setSD="0" ChFAckReq="0" CRC="valid"
PDin_M="PD" SDset_S="0" ChFAckReq_S="0" DCommErr_S="0" DTimeout_S="0" MCommErr_S="0" MTimeout_S="0"/>
    <FSMasterReceive_FSAppReceive PDin="PD" PortNum="invalid" DCount="6" SDset="0" DCommErr="0" DTimeout="0"
CRC="valid" PDout_M="PD" setSD_C="0" ChFAck_C="1"/>
    <Transition SourceState="WaitOnResponse_5" TargetState="CheckSPDU_3"/>
    <Transition SourceState="CheckSPDU_3" TargetState="PrepareSPDU_6"/>
    <Transition SourceState="PrepareSPDU_6" TargetState="WaitOnResponse_7"/>
    <FSMasterSend_FSAppSend PDout="SD" PortNum="valid" MCount="4" setSD="1" ChFAckReq="0" CRC="valid"
PDin_M="SD" SDset_S="1" ChFAckReq_S="0" DCommErr_S="0" DTimeout_S="0" MCommErr_S="1" MTimeout_S="0"/>
  </FSMasterSclTestCaseSteps>
</Testroot>
```

12.2.9 Test script 9

Table 181 defines the test conditions for this test case. The associated XML file contains steps and message parameters for the state flow check in case of setSD =1 and MCount =0.

Table 181 – FS-Master test script 9

TEST CASE ATTRIBUTES	IDENTIFICATION / REFERENCE
Identification (ID)	SDCI_FSTC_0172
Name	FSTCM_SCLM_FLOW_SETSD1MC0
Purpose (short)	
Equipment under test (EUT)	FS-Master
Test case version	1.0
Category / type	FS-Master automated SCL protocol test
Specification (clause)	[3] clause 11.3.2, Figure 36 (services); clause 11.5.2, Figure 41 (state chart)
Configuration / setup	See Table A.208
TEST CASE	**CONDITIONS / PERFORMANCE**
Purpose (detailed)	Protocol flow in case of distinct error
Precondition	FS-Master to send first message
Procedure	See XML file "IO-Link-Safety_spec_master_final_testsuite_testcase_9.xml"
Test parameter	See Table 172 and XML file
Post condition	–
TEST CASE RESULTS	**CHECK / REACTION**
Evaluation	Comparison of expected and received values according to the XML file
Test passed	Comparison OK
Test failed (examples)	Comparison not OK
Report	Printout of the automated SCL protocol tester <pass/fail>

Content of file "IO-Link-Safety_spec_master_final_testsuite_testcase_9.xml":


```xml
<?xml version="1.0" encoding="UTF-8"?>
<Testroot xsi:noNamespaceSchemaLocation="IO-Link-Safety-Test-Procedure_Types_V1.0.xsd"
xmlns:xsi="http://www.w3.org/2001/XMLSchema-instance" version="1.2" name="tc_9" date="20.11.2018: 14:01:29.068">
  <FSMasterSclTestCaseSteps>
    <Transition SourceState="Init" TargetState="PrepareSPDU_1"/>
    <Transition SourceState="PrepareSPDU_1" TargetState="WaitOnResponse_2"/>
    <FSMasterSend_FSAppSend PDout="SD" PortNum="valid" MCount="0" setSD="1" ChFAckReq="0" CRC="valid"
PDin_M="SD" SDset_S="1" ChFAckReq_S="0" DCommErr_S="0" DTimeout_S="0" MCommErr_S="0" MTimeout_S="0"/>
    <FSMasterReceive_FSAppReceive PDin="PD" PortNum="valid" DCount="7" SDset="0" DCommErr="0" DTimeout="0"
CRC="valid" PDout_M="PD" setSD_C="0" ChFAck_C="0"/>
    <Transition SourceState="WaitOnResponse_2" TargetState="CheckSPDU_3"/>
    <Transition SourceState="CheckSPDU_3" TargetState="PrepareSPDU_4"/>
    <Transition SourceState="PrepareSPDU_4" TargetState="WaitOnResponse_5"/>
    <FSMasterSend_FSAppSend PDout="PD" PortNum="valid" MCount="1" setSD="0" ChFAckReq="0" CRC="valid"
PDin_M="PD" SDset_S="0" ChFAckReq_S="0" DCommErr_S="0" DTimeout_S="0" MCommErr_S="0" MTimeout_S="0"/>
    <FSMasterReceive_FSAppReceive PDin="PD" PortNum="valid" DCount="6" SDset="1" DCommErr="0" DTimeout="0"
CRC="valid" PDout_M="PD" setSD_C="0" ChFAck_C="0"/>
    <Transition SourceState="WaitOnResponse_5" TargetState="CheckSPDU_3"/>
    <Transition SourceState="CheckSPDU_3" TargetState="PrepareSPDU_4"/>
    <Transition SourceState="PrepareSPDU_4" TargetState="WaitOnResponse_5"/>
    <FSMasterSend_FSAppSend PDout="PD" PortNum="valid" MCount="2" setSD="0" ChFAckReq="0" CRC="valid"
PDin_M="SD" SDset_S="1" ChFAckReq_S="0" DCommErr_S="0" DTimeout_S="0" MCommErr_S="0" MTimeout_S="0"/>
    <FSMasterReceive_FSAppReceive PDin="PD" PortNum="valid" DCount="5" SDset="0" DCommErr="0" DTimeout="0"
CRC="valid" PDout_M="PD" setSD_C="0" ChFAck_C="0"/>
    <Transition SourceState="WaitOnResponse_5" TargetState="CheckSPDU_3"/>
    <Transition SourceState="CheckSPDU_3" TargetState="PrepareSPDU_4"/>
    <Transition SourceState="PrepareSPDU_4" TargetState="WaitOnResponse_5"/>
    <FSMasterSend_FSAppSend PDout="PD" PortNum="valid" MCount="3" setSD="0" ChFAckReq="0" CRC="valid"
PDin_M="PD" SDset_S="0" ChFAckReq_S="0" DCommErr_S="0" DTimeout_S="0" MCommErr_S="0" MTimeout_S="0"/>
```

```
    <FSMasterReceive_FSAppReceive PDin="PD" PortNum="invalid" DCount="0" SDset="0" DCommErr="0" DTimeout="1"
CRC="valid" PDout_M="PD" setSD_C="0" ChFAck_C="0"/>
    <Transition SourceState="WaitOnResponse_5" TargetState="CheckSPDU_3"/>
    <Transition SourceState="CheckSPDU_3" TargetState="PrepareSPDU_6"/>
    <Transition SourceState="PrepareSPDU_6" TargetState="WaitOnResponse_7"/>
    <FSMasterSend_FSAppSend PDout="SD" PortNum="valid" MCount="4" setSD="1" ChFAckReq="0" CRC="valid"
PDin_M="SD" SDset_S="1" ChFAckReq_S="0" DCommErr_S="0" DTimeout_S="1" MCommErr_S="1" MTimeout_S="0"/>
  </FSMasterSclTestCaseSteps>
</Testroot>
```

12.2.10 Test script 10

Table 182 defines the test conditions for this test case. The associated XML file contains steps and message parameters for the state flow check in case of setSD =1, MCount =0, Port number error, and CRC error.

Table 182 – FS-Master test script 10

TEST CASE ATTRIBUTES	IDENTIFICATION / REFERENCE
Identification (ID)	SDCI_FSTC_0173
Name	FSTCM_SCLM_FLOW_PNERRCRCERR
Purpose (short)	
Equipment under test (EUT)	FS-Master
Test case version	1.0
Category / type	FS-Master automated SCL protocol test
Specification (clause)	[3] clause 11.3.2, Figure 36 (services); clause 11.5.2, Figure 41 (state chart)
Configuration / setup	See Table A.208

TEST CASE	CONDITIONS / PERFORMANCE
Purpose (detailed)	Protocol flow in case of distinct error
Precondition	FS-Master to send first message
Procedure	See XML file "IO-Link-Safety_spec_master_final_testsuite_testcase_10.xml"
Test parameter	See Table 172 and XML file
Post condition	–

TEST CASE RESULTS	CHECK / REACTION
Evaluation	Comparison of expected and received values according to the XML file
Test passed	Comparison OK
Test failed (examples)	Comparison not OK
Report	Printout of the automated SCL protocol tester <pass/fail>

Content of file "IO-Link-Safety_spec_master_final_testsuite_testcase_10.xml":

```xml
<?xml version="1.0" encoding="UTF-8"?>
<Testroot xsi:noNamespaceSchemaLocation="IO-Link-Safety-Test-Procedure_Types_V1.0.xsd"
xmlns:xsi="http://www.w3.org/2001/XMLSchema-instance" version="1.2" name="tc_10" date="20.11.2018: 14:01:29.068">
  <FSMasterSclTestCaseSteps>
    <Transition SourceState="Init" TargetState="PrepareSPDU_1"/>
    <Transition SourceState="PrepareSPDU_1" TargetState="WaitOnResponse_2"/>
    <FSMasterSend_FSAppSend PDout="SD" PortNum="valid" MCount="0" setSD="1" ChFAckReq="0" CRC="valid"
PDin_M="SD" SDset_S="1" ChFAckReq_S="0" DCommErr_S="0" DTimeout_S="0" MCommErr_S="0" MTimeout_S="0"/>
    <FSMasterReceive_FSAppReceive PDin="PD" PortNum="valid" DCount="7" SDset="0" DCommErr="1" DTimeout="0"
CRC="valid" PDout_M="PD" setSD_C="0" ChFAck_C="0"/>
    <Transition SourceState="WaitOnResponse_2" TargetState="CheckSPDU_3"/>
    <Transition SourceState="CheckSPDU_3" TargetState="PrepareSPDU_6"/>
    <Transition SourceState="PrepareSPDU_6" TargetState="WaitOnResponse_7"/>
    <FSMasterSend_FSAppSend PDout="SD" PortNum="valid" MCount="1" setSD="1" ChFAckReq="0" CRC="valid"
PDin_M="SD" SDset_S="1" ChFAckReq_S="0" DCommErr_S="1" DTimeout_S="0" MCommErr_S="0" MTimeout_S="0"/>
    <FSMasterReceive_FSAppReceive PDin="PD" PortNum="valid" DCount="6" SDset="0" DCommErr="0" DTimeout="0"
CRC="invalid" PDout_M="PD" setSD_C="0" ChFAck_C="0"/>
    <Transition SourceState="WaitOnResponse_7" TargetState="CheckSPDU_8"/>
    <Transition SourceState="CheckSPDU_8" TargetState="PrepareSPDU_6"/>
    <Transition SourceState="PrepareSPDU_6" TargetState="WaitOnResponse_7"/>
    <FSMasterSend_FSAppSend PDout="SD" PortNum="valid" MCount="2" setSD="1" ChFAckReq="0" CRC="valid"
PDin_M="SD" SDset_S="1" ChFAckReq_S="0" DCommErr_S="0" DTimeout_S="0" MCommErr_S="1" MTimeout_S="0"/>
    <FSMasterReceive_FSAppReceive PDin="PD" PortNum="valid" DCount="5" SDset="0" DCommErr="1" DTimeout="0"
CRC="valid" PDout_M="PD" setSD_C="0" ChFAck_C="0"/>
    <Transition SourceState="WaitOnResponse_7" TargetState="CheckSPDU_8"/>
    <Transition SourceState="CheckSPDU_8" TargetState="PrepareSPDU_6"/>
    <Transition SourceState="PrepareSPDU_6" TargetState="WaitOnResponse_7"/>
```

```
    <FSMasterSend_FSAppSend PDout="SD" PortNum="valid" MCount="3" setSD="1" ChFAckReq="0" CRC="valid"
PDin_M="SD" SDset_S="1" ChFAckReq_S="0" DCommErr_S="1" DTimeout_S="0" MCommErr_S="0" MTimeout_S="0"/>
    <FSMasterReceive_FSAppReceive PDin="PD" PortNum="invalid" DCount="4" SDset="0" DCommErr="0" DTimeout="1"
CRC="valid" PDout_M="PD" setSD_C="0" ChFAck_C="0"/>
    <Transition SourceState="WaitOnResponse_7" TargetState="CheckSPDU_8"/>
    <Transition SourceState="CheckSPDU_8" TargetState="PrepareSPDU_6"/>
    <Transition SourceState="PrepareSPDU_6" TargetState="WaitOnResponse_7"/>
    <FSMasterSend_FSAppSend PDout="SD" PortNum="valid" MCount="4" setSD="1" ChFAckReq="0" CRC="valid"
PDin_M="SD" SDset_S="1" ChFAckReq_S="0" DCommErr_S="0" DTimeout_S="1" MCommErr_S="1" MTimeout_S="0"/>
    <FSMasterReceive_FSAppReceive PDin="PD" PortNum="invalid" DCount="3" SDset="0" DCommErr="0" DTimeout="1"
CRC="valid" PDout_M="PD" setSD_C="0" ChFAck_C="0"/>
    <Transition SourceState="WaitOnResponse_7" TargetState="CheckSPDU_8"/>
    <Transition SourceState="CheckSPDU_8" TargetState="PrepareSPDU_6"/>
    <Transition SourceState="PrepareSPDU_6" TargetState="WaitOnResponse_7"/>
    <FSMasterSend_FSAppSend PDout="SD" PortNum="valid" MCount="5" setSD="1" ChFAckReq="0" CRC="valid"
PDin_M="SD" SDset_S="1" ChFAckReq_S="0" DCommErr_S="0" DTimeout_S="1" MCommErr_S="1" MTimeout_S="0"/>
    <FSMasterReceive_FSAppReceive PDin="PD" PortNum="invalid" DCount="2" SDset="0" DCommErr="0" DTimeout="1"
CRC="valid" PDout_M="PD" setSD_C="0" ChFAck_C="0"/>
    <Transition SourceState="WaitOnResponse_7" TargetState="CheckSPDU_8"/>
    <Transition SourceState="CheckSPDU_8" TargetState="PrepareSPDU_6"/>
    <Transition SourceState="PrepareSPDU_6" TargetState="WaitOnResponse_7"/>
    <FSMasterSend_FSAppSend PDout="SD" PortNum="valid" MCount="6" setSD="1" ChFAckReq="0" CRC="valid"
PDin_M="SD" SDset_S="1" ChFAckReq_S="0" DCommErr_S="0" DTimeout_S="1" MCommErr_S="1" MTimeout_S="0"/>
    <FSMasterReceive_FSAppReceive PDin="PD" PortNum="valid" DCount="1" SDset="0" DCommErr="0" DTimeout="0"
CRC="valid" PDout_M="PD" setSD_C="0" ChFAck_C="0"/>
    <Transition SourceState="WaitOnResponse_7" TargetState="CheckSPDU_8"/>
    <Transition SourceState="CheckSPDU_8" TargetState="PrepareSPDU_6"/>
    <Transition SourceState="PrepareSPDU_6" TargetState="WaitOnResponse_7"/>
    <FSMasterSend_FSAppSend PDout="SD" PortNum="valid" MCount="7" setSD="1" ChFAckReq="1" CRC="valid"
PDin_M="SD" SDset_S="1" ChFAckReq_S="1" DCommErr_S="0" DTimeout_S="0" MCommErr_S="0" MTimeout_S="0"/>
    <Transition SourceState="WaitOnResponse_7" TargetState="WaitOnResponse_7"/>
    <FSMasterReceive_FSAppReceive PDin="PD" PortNum="valid" DCount="0" SDset="0" DCommErr="0" DTimeout="0"
CRC="valid" PDout_M="PD" setSD_C="1" ChFAck_C="1"/>
    <Transition SourceState="WaitOnResponse_7" TargetState="CheckSPDU_8"/>
    <Transition SourceState="CheckSPDU_8" TargetState="PrepareSPDU_4"/>
    <Transition SourceState="PrepareSPDU_4" TargetState="WaitOnResponse_5"/>
    <FSMasterSend_FSAppSend PDout="SD" PortNum="valid" MCount="1" setSD="1" ChFAckReq="0" CRC="valid"
PDin_M="SD" SDset_S="1" ChFAckReq_S="0" DCommErr_S="0" DTimeout_S="0" MCommErr_S="0" MTimeout_S="0"/>
    <FSMasterReceive_FSAppReceive PDin="PD" PortNum="valid" DCount="6" SDset="0" DCommErr="1" DTimeout="0"
CRC="valid" PDout_M="PD" setSD_C="1" ChFAck_C="1"/>
    <Transition SourceState="WaitOnResponse_5" TargetState="CheckSPDU_3"/>
    <Transition SourceState="CheckSPDU_3" TargetState="PrepareSPDU_6"/>
    <Transition SourceState="PrepareSPDU_6" TargetState="WaitOnResponse_7"/>
    <FSMasterSend_FSAppSend PDout="SD" PortNum="valid" MCount="2" setSD="1" ChFAckReq="0" CRC="valid"
PDin_M="SD" SDset_S="1" ChFAckReq_S="0" DCommErr_S="1" DTimeout_S="0" MCommErr_S="0" MTimeout_S="0"/>
  </FSMasterSclTestCaseSteps>
</Testroot>
```

12.2.11 Test script 11

Table 183 defines the test conditions for this test case. The associated XML file contains steps and message parameters for the state flow check in case of setSD =1, MCount =0, Port number error, and CRC error.

Table 183 – FS-Master test script 11

TEST CASE ATTRIBUTES	IDENTIFICATION / REFERENCE
Identification (ID)	SDCI_FSTC_0174
Name	FSTCM_SCLM_FLOW_PNERRCRCERR
Purpose (short)	
Equipment under test (EUT)	FS-Master
Test case version	1.0
Category / type	FS-Master automated SCL protocol test
Specification (clause)	[3] clause 11.3.2, Figure 36 (services); clause 11.5.2, Figure 41 (state chart)
Configuration / setup	See Table A.208

TEST CASE	CONDITIONS / PERFORMANCE
Purpose (detailed)	Protocol flow in case of distinct error
Precondition	FS-Master to send first message
Procedure	See XML file "IO-Link-Safety_spec_master_final_testsuite_testcase_11.xml"
Test parameter	See Table 172 and XML file
Post condition	–

TEST CASE RESULTS	CHECK / REACTION
Evaluation	Comparison of expected and received values according to the XML file
Test passed	Comparison OK
Test failed (examples)	Comparison not OK
Report	Printout of the automated SCL protocol tester <pass/fail>

Content of file "IO-Link-Safety_spec_master_final_testsuite_testcase_11.xml":

```
<?xml version="1.0" encoding="UTF-8"?>
<Testroot xsi:noNamespaceSchemaLocation="IO-Link-Safety-Test-Procedure_Types_V1.0.xsd"
xmlns:xsi="http://www.w3.org/2001/XMLSchema-instance" version="1.2" name="tc_11" date="20.11.2018: 14:01:29.068">
  <FSMasterSclTestCaseSteps>
    <Transition SourceState="Init" TargetState="PrepareSPDU_1"/>
    <Transition SourceState="PrepareSPDU_1" TargetState="WaitOnResponse_2"/>
    <FSMasterSend_FSAppSend PDout="SD" PortNum="valid" MCount="0" setSD="1" ChFAckReq="0" CRC="valid"
PDin_M="SD" SDset_S="1" ChFAckReq_S="0" DCommErr_S="0" DTimeout_S="0" MCommErr_S="0" MTimeout_S="0"/>
    <FSMasterReceive_FSAppReceive PDin="PD" PortNum="valid" DCount="7" SDset="0" DCommErr="1" DTimeout="0"
CRC="valid" PDout_M="PD" setSD_C="0" ChFAck_C="0"/>
    <Transition SourceState="WaitOnResponse_2" TargetState="CheckSPDU_3"/>
    <Transition SourceState="CheckSPDU_3" TargetState="PrepareSPDU_6"/>
    <Transition SourceState="PrepareSPDU_6" TargetState="WaitOnResponse_7"/>
    <FSMasterSend_FSAppSend PDout="SD" PortNum="valid" MCount="1" setSD="1" ChFAckReq="0" CRC="valid"
PDin_M="SD" SDset_S="1" ChFAckReq_S="0" DCommErr_S="1" DTimeout_S="0" MCommErr_S="0" MTimeout_S="0"/>
    <FSMasterReceive_FSAppReceive PDin="PD" PortNum="valid" DCount="6" SDset="0" DCommErr="0" DTimeout="0"
CRC="invalid" PDout_M="PD" setSD_C="0" ChFAck_C="0"/>
    <Transition SourceState="WaitOnResponse_7" TargetState="CheckSPDU_8"/>
    <Transition SourceState="CheckSPDU_8" TargetState="PrepareSPDU_6"/>
    <Transition SourceState="PrepareSPDU_6" TargetState="WaitOnResponse_7"/>
    <FSMasterSend_FSAppSend PDout="SD" PortNum="valid" MCount="2" setSD="1" ChFAckReq="0" CRC="valid"
PDin_M="SD" SDset_S="1" ChFAckReq_S="0" DCommErr_S="0" DTimeout_S="0" MCommErr_S="1" MTimeout_S="0"/>
    <FSMasterReceive_FSAppReceive PDin="PD" PortNum="valid" DCount="5" SDset="0" DCommErr="1" DTimeout="0"
CRC="valid" PDout_M="PD" setSD_C="0" ChFAck_C="0"/>
    <Transition SourceState="WaitOnResponse_7" TargetState="CheckSPDU_8"/>
    <Transition SourceState="CheckSPDU_8" TargetState="PrepareSPDU_6"/>
    <Transition SourceState="PrepareSPDU_6" TargetState="WaitOnResponse_7"/>
```

```
    <FSMasterSend_FSAppSend PDout="SD" PortNum="valid" MCount="3" setSD="1" ChFAckReq="0" CRC="valid"
PDin_M="SD" SDset_S="1" ChFAckReq_S="0" DCommErr_S="1" DTimeout_S="0" MCommErr_S="0" MTimeout_S="0"/>
    <FSMasterReceive_FSAppReceive PDin="PD" PortNum="invalid" DCount="4" SDset="0" DCommErr="0" DTimeout="1"
CRC="valid" PDout_M="PD" setSD_C="0" ChFAck_C="0"/>
    <Transition SourceState="WaitOnResponse_7" TargetState="CheckSPDU_8"/>
    <Transition SourceState="CheckSPDU_8" TargetState="PrepareSPDU_6"/>
    <Transition SourceState="PrepareSPDU_6" TargetState="WaitOnResponse_7"/>
    <FSMasterSend_FSAppSend PDout="SD" PortNum="valid" MCount="4" setSD="1" ChFAckReq="0" CRC="valid"
PDin_M="SD" SDset_S="1" ChFAckReq_S="0" DCommErr_S="0" DTimeout_S="1" MCommErr_S="1" MTimeout_S="0"/>
    <FSMasterReceive_FSAppReceive PDin="PD" PortNum="invalid" DCount="3" SDset="0" DCommErr="0" DTimeout="1"
CRC="valid" PDout_M="PD" setSD_C="0" ChFAck_C="0"/>
    <Transition SourceState="WaitOnResponse_7" TargetState="CheckSPDU_8"/>
    <Transition SourceState="CheckSPDU_8" TargetState="PrepareSPDU_6"/>
    <Transition SourceState="PrepareSPDU_6" TargetState="WaitOnResponse_7"/>
    <FSMasterSend_FSAppSend PDout="SD" PortNum="valid" MCount="5" setSD="1" ChFAckReq="0" CRC="valid"
PDin_M="SD" SDset_S="1" ChFAckReq_S="0" DCommErr_S="0" DTimeout_S="1" MCommErr_S="1" MTimeout_S="0"/>
    <FSMasterReceive_FSAppReceive PDin="PD" PortNum="invalid" DCount="2" SDset="0" DCommErr="0" DTimeout="1"
CRC="valid" PDout_M="PD" setSD_C="0" ChFAck_C="0"/>
    <Transition SourceState="WaitOnResponse_7" TargetState="CheckSPDU_8"/>
    <Transition SourceState="CheckSPDU_8" TargetState="PrepareSPDU_6"/>
    <Transition SourceState="PrepareSPDU_6" TargetState="WaitOnResponse_7"/>
    <FSMasterSend_FSAppSend PDout="SD" PortNum="valid" MCount="6" setSD="1" ChFAckReq="0" CRC="valid"
PDin_M="SD" SDset_S="1" ChFAckReq_S="0" DCommErr_S="0" DTimeout_S="1" MCommErr_S="1" MTimeout_S="0"/>
    <FSMasterReceive_FSAppReceive PDin="PD" PortNum="valid" DCount="1" SDset="0" DCommErr="0" DTimeout="0"
CRC="valid" PDout_M="PD" setSD_C="0" ChFAck_C="0"/>
    <Transition SourceState="WaitOnResponse_7" TargetState="CheckSPDU_8"/>
    <Transition SourceState="CheckSPDU_8" TargetState="PrepareSPDU_6"/>
    <Transition SourceState="PrepareSPDU_6" TargetState="WaitOnResponse_7"/>
    <FSMasterSend_FSAppSend PDout="SD" PortNum="valid" MCount="7" setSD="1" ChFAckReq="1" CRC="valid"
PDin_M="SD" SDset_S="1" ChFAckReq_S="1" DCommErr_S="0" DTimeout_S="0" MCommErr_S="0" MTimeout_S="0"/>
    <Transition SourceState="WaitOnResponse_7" TargetState="WaitOnResponse_7"/>
    <FSMasterReceive_FSAppReceive PDin="PD" PortNum="valid" DCount="0" SDset="0" DCommErr="0" DTimeout="0"
CRC="valid" PDout_M="PD" setSD_C="1" ChFAck_C="1"/>
    <Transition SourceState="WaitOnResponse_7" TargetState="CheckSPDU_8"/>
    <Transition SourceState="CheckSPDU_8" TargetState="PrepareSPDU_4"/>
    <Transition SourceState="PrepareSPDU_4" TargetState="WaitOnResponse_5"/>
    <FSMasterSend_FSAppSend PDout="SD" PortNum="valid" MCount="1" setSD="1" ChFAckReq="0" CRC="valid"
PDin_M="SD" SDset_S="1" ChFAckReq_S="0" DCommErr_S="0" DTimeout_S="0" MCommErr_S="0" MTimeout_S="0"/>
    <FSMasterReceive_FSAppReceive PDin="PD" PortNum="valid" DCount="1" SDset="0" DCommErr="0" DTimeout="0"
CRC="valid" PDout_M="PD" setSD_C="1" ChFAck_C="1"/>
    <Transition SourceState="WaitOnResponse_5" TargetState="CheckSPDU_3"/>
    <Transition SourceState="CheckSPDU_3" TargetState="PrepareSPDU_6"/>
    <Transition SourceState="PrepareSPDU_6" TargetState="WaitOnResponse_7"/>
    <FSMasterSend_FSAppSend PDout="SD" PortNum="valid" MCount="2" setSD="1" ChFAckReq="0" CRC="valid"
PDin_M="SD" SDset_S="1" ChFAckReq_S="0" DCommErr_S="0" DTimeout_S="0" MCommErr_S="1" MTimeout_S="0"/>
  </FSMasterSclTestCaseSteps>
</Testroot>
```

12.2.12 Test script 12

Table 184 defines the test conditions for this test case. The associated XML file contains steps and message parameters for the state flow check in case of a port number error and MCount =0.

Table 184 – FS-Master test script 12

TEST CASE ATTRIBUTES	IDENTIFICATION / REFERENCE
Identification (ID)	SDCI_FSTC_0175
Name	FSTCM_SCLM_FLOW_PNERRMC0
Purpose (short)	
Equipment under test (EUT)	FS-Master
Test case version	1.0
Category / type	FS-Master automated SCL protocol test
Specification (clause)	[3] clause 11.3.2, Figure 36 (services); clause 11.5.2, Figure 41 (state chart)
Configuration / setup	See Table A.208

TEST CASE	CONDITIONS / PERFORMANCE
Purpose (detailed)	Protocol flow in case of distinct error
Precondition	FS-Master to send first message
Procedure	See XML file "IO-Link-Safety_spec_master_final_testsuite_testcase_12.xml"
Test parameter	See Table 172 and XML file
Post condition	–

TEST CASE RESULTS	CHECK / REACTION
Evaluation	Comparison of expected and received values according to the XML file
Test passed	Comparison OK
Test failed (examples)	Comparison not OK
Report	Printout of the automated SCL protocol tester <pass/fail>

Content of file "IO-Link-Safety_spec_master_final_testsuite_testcase_12.xml":

```xml
<?xml version="1.0" encoding="UTF-8"?>
<Testroot xsi:noNamespaceSchemaLocation="IO-Link-Safety-Test-Procedure_Types_V1.0.xsd"
xmlns:xsi="http://www.w3.org/2001/XMLSchema-instance" version="1.2" name="tc_12" date="20.11.2018: 14:01:29.068">
  <FSMasterSclTestCaseSteps>
    <Transition SourceState="Init" TargetState="PrepareSPDU_1"/>
    <Transition SourceState="PrepareSPDU_1" TargetState="WaitOnResponse_2"/>
    <FSMasterSend_FSAppSend PDout="SD" PortNum="valid" MCount="0" setSD="1" ChFAckReq="0" CRC="valid"
PDin_M="SD" SDset_S="1" ChFAckReq_S="0" DCommErr_S="0" DTimeout_S="0" MCommErr_S="0" MTimeout_S="0"/>
    <Transition SourceState="WaitOnResponse_2" TargetState="WaitOnResponse_2"/>
    <FSMasterReceive_FSAppReceive PDin="PD" PortNum="invalid" DCount="0" SDset="0" DCommErr="0" DTimeout="0"
CRC="valid" PDout_M="PD" setSD_C="0" ChFAck_C="0"/>
    <Transition SourceState="WaitOnResponse_2" TargetState="CheckSPDU_3"/>
    <Transition SourceState="CheckSPDU_3" TargetState="PrepareSPDU_6"/>
    <Transition SourceState="PrepareSPDU_6" TargetState="WaitOnResponse_7"/>
    <FSMasterSend_FSAppSend PDout="SD" PortNum="valid" MCount="1" setSD="1" ChFAckReq="0" CRC="valid"
PDin_M="SD" SDset_S="1" ChFAckReq_S="0" DCommErr_S="0" DTimeout_S="0" MCommErr_S="1" MTimeout_S="0"/>
  </FSMasterSclTestCaseSteps>
</Testroot>
```

12.2.13 Test script 13

Table 185 defines the test conditions for this test case. The associated XML file contains steps and message parameters for the state flow check in case of CRC error and MCount =0.

Table 185 – FS-Master test script 13

TEST CASE ATTRIBUTES	IDENTIFICATION / REFERENCE
Identification (ID)	SDCI_FSTC_0176
Name	FSTCM_SCLM_FLOW_CRCERRMC0
Purpose (short)	
Equipment under test (EUT)	FS-Master
Test case version	1.0
Category / type	FS-Master automated SCL protocol test
Specification (clause)	[3] clause 11.3.2, Figure 36 (services); clause 11.5.2, Figure 41 (state chart)
Configuration / setup	See Table A.208
TEST CASE	**CONDITIONS / PERFORMANCE**
Purpose (detailed)	Protocol flow in case of distinct error
Precondition	FS-Master to send first message
Procedure	See XML file "IO-Link-Safety_spec_master_final_testsuite_testcase_13.xml"
Test parameter	See Table 172 and XML file
Post condition	–
TEST CASE RESULTS	**CHECK / REACTION**
Evaluation	Comparison of expected and received values according to the XML file
Test passed	Comparison OK
Test failed (examples)	Comparison not OK
Report	Printout of the automated SCL protocol tester <pass/fail>

Content of file "IO-Link-Safety_spec_master_final_testsuite_testcase_13.xml":

```xml
<?xml version="1.0" encoding="UTF-8"?>
<Testroot xsi:noNamespaceSchemaLocation="IO-Link-Safety-Test-Procedure_Types_V1.0.xsd"
xmlns:xsi="http://www.w3.org/2001/XMLSchema-instance" version="1.2" name="tc_13" date="20.11.2018: 14:01:29.068">
  <FSMasterSclTestCaseSteps>
    <Transition SourceState="Init" TargetState="PrepareSPDU_1"/>
    <Transition SourceState="PrepareSPDU_1" TargetState="WaitOnResponse_2"/>
    <FSMasterSend_FSAppSend PDout="SD" PortNum="valid" MCount="0" setSD="1" ChFAckReq="0" CRC="valid"
PDin_M="SD" SDset_S="1" ChFAckReq_S="0" DCommErr_S="0" DTimeout_S="0" MCommErr_S="0" MTimeout_S="0"/>
    <FSMasterReceive_FSAppReceive PDin="PD" PortNum="valid" DCount="0" SDset="0" DCommErr="0" DTimeout="0"
CRC="invalid" PDout_M="PD" setSD_C="0" ChFAck_C="0"/>
    <Transition SourceState="WaitOnResponse_2" TargetState="CheckSPDU_3"/>
    <Transition SourceState="CheckSPDU_3" TargetState="PrepareSPDU_6"/>
    <Transition SourceState="PrepareSPDU_6" TargetState="WaitOnResponse_7"/>
    <FSMasterSend_FSAppSend PDout="SD" PortNum="valid" MCount="1" setSD="1" ChFAckReq="0" CRC="valid"
PDin_M="SD" SDset_S="1" ChFAckReq_S="0" DCommErr_S="0" DTimeout_S="0" MCommErr_S="1" MTimeout_S="0"/>
  </FSMasterSclTestCaseSteps>
</Testroot>
```

13 FS-Master additional functional tests

13.1 Overview

The FS-Master with reference FS-Devices test comprise tests, where several approved FS-Devices as reference are available. Rules for reference systems are defined in A.2.6.

An approved SMTU shall be used for the following test cases except for the basic reference test FSTCM_REFT_RD where reference Devices from regular automation environments must be used.

The FS-Master in additional functional tests comprise tests of the splitter and composer for Process Data. Since tests for SR PD are already included in 12.2, the test cases here focus on the NSR PD part. They are followed by test cases for special SMI services for read back of the (safety) Port configuration and Port status and optionally by test cases for the correct Process Data in case of OSSDe (FS-DI) Port mode. In addition, Port Events are tested. Besides tests for the FS-Master SCL protocol watchdog, the aspects of Safety Function Response Time (SFRT) are covered.

13.2 Splitter/composer

13.2.1 Splitter in mixed PD mode (CRC32)

Table 186 defines the test conditions for this test case.

Table 186 – Splitter in mixed PD mode (CRC32)

TEST CASE ATTRIBUTES	IDENTIFICATION / REFERENCE
Identification (ID)	SDCI_FSTC_0177
Name	FSTCM_FSOP_SPLITTERMIXPD32
Purpose (short)	Check whether NSR PD of an FS-Device (sensor) are transferred correctly
Equipment under test (EUT)	FS-Master + Tool
Test case version	1.0
Category / type	FS-Master test, test-to-pass
Specification (clause)	[3] 10.2, 10.3, 10.5
Configuration / setup	FS-Master-Tester-System

TEST CASE	CONDITIONS / PERFORMANCE
Purpose (detailed)	Check whether NSR PD of an FS-Device (sensor) are transferred correctly with the help of SMI_PDIn in case of CRC32 and in mixed mode.
Precondition	EUT: PORT_FSCOM SMTU: SMTU_STANDARD_STATE_32
Procedure	a) SMTU_NSR_Set(NSR, PDValid) *;set NSR Process Data + PDValid* b) SMTU_SPDU_Change *;wait until SPDU has changed* c) TM_Await(2*MasterCycleTime) *; make sure the EUT sees new PDIn* d) SMI_PDIn *;return ArgBlock "PDIn"* e) Evaluate 1)
Test parameter	NSR[1] = {3}, PDValid = 1
Post condition	–

TEST CASE RESULTS	CHECK / REACTION
Evaluation	1) Check (NSR) "PDIn"
Test passed	PDIn. InputDataLength = 1, PDIn.PDI0 = 3 PDIn.PQI = 1
Test failed (examples)	Any check incorrect
Report	Values OK: <yes/no> <ok | nok>

13.2.2 Composer in mixed PD mode (CRC32)

Table 187 defines the test conditions for this test case.

Table 187 – Composer in mixed PD mode (CRC32)

TEST CASE ATTRIBUTES	IDENTIFICATION / REFERENCE
Identification (ID)	SDCI_FSTC_0181
Name	FSTCM_FSOP_COMPOSERMIXPD32
Purpose (short)	Check whether NSR PD to an FS-Device (actuator) are transferred correctly
Equipment under test (EUT)	FS-Master + Tool
Test case version	1.0
Category / type	FS-Master test, test-to-pass
Specification (clause)	[3] 10.2, 10.3, 10.5
Configuration / setup	FS-Master-Tester-System

TEST CASE	CONDITIONS / PERFORMANCE
Purpose (detailed)	Check whether NSR PD to an FS-Device (actuator) are transferred correctly via SMI_PDOut and checked via SMTU instruction case of CRC32.
Precondition	EUT: PORT_FSCOM SMTU: SMTU_STANDARD_STATE_32
Procedure	a) SMI_PDOut(ABPS_PDOUT32<OutputDataLength=1>,<PDO=NSR>) b) STM_WAIT_TIMEOUT *;wait for FSP_Watchdog timeout* c) SMI_FSPDInOut *;returns "FSPDInOut"* d) Evaluate 1) e) SMI_PDInOut; ;*returns "PDInOut"* f) Evaluate 2) g) SMTU_SPDU_Change *;wait until SPDU has changed* h) SMTU_MixData_Get *;returns "mixed PD"* i) Evaluate 2)
Test parameter	NSR[1] = {3}
Post condition	–

TEST CASE RESULTS	CHECK / REACTION
Evaluation	1) Check "FSPDInOut" 2) Check "PDInOut" 3) Check "mixed PD"
Test passed	FSPDInOut.PDO0 = 3, PDInOut.PDO0 = 3. NSR = {3}, OE = Valid
Test failed (examples)	Any check incorrect
Report	Values OK: <yes/no> <ok | nok>

13.3 SMI service tests (safety)

13.3.1 Read back safety configuration

Table 188 defines the test conditions for this test case.

Table 188 – Read back safety configuration

TEST CASE ATTRIBUTES	IDENTIFICATION / REFERENCE
Identification (ID)	SDCI_FSTC_0185
Name	FSTCM_SMIS_READBACKCONFIG
Purpose (short)	Check whether safety configuration is read back correctly
Equipment under test (EUT)	FS-Master + Tool
Test case version	1.1
Category / type	FS-Master test, test-to-pass
Specification (clause)	[3]
Configuration / setup	FS-Master-Tester-System
TEST CASE	**CONDITIONS / PERFORMANCE**
Purpose (detailed)	Check whether safety configuration is read back correctly with the help of SMI_ReadbackPortConfiguration using ArgBlock 0x8100
Precondition	EUT: PORT_POWER_OFF SMTU: SMTU_STANDARD_STATE_32
Procedure	a) SMI_PortConfiguration(ABPS_FSCONFIG_SAFECOM) b) SMI_ReadbackPortConfiguration(0x8100) ;*returns ArgBlock "FSPortConfigList"* c) Evaluation 1)
Test parameter	–
Post condition	–
TEST CASE RESULTS	**CHECK / REACTION**
Evaluation	1) Compare ArgBlock "FSPortConfigList" with ABPS_FSCONFIG_SAFECOM
Test passed	All comparisons match
Test failed (examples)	Any mismatch at comparison
Report	Mismatches: <yes/no> <ok | nok>

13.3.2 Safety Port status

Table 189 defines the test conditions for this test case.

Table 189 – Safety Port status

TEST CASE ATTRIBUTES	IDENTIFICATION / REFERENCE
Identification (ID)	SDCI_FSTC_0186
Name	FSTCM_SMIS_FSPORTSTATUS
Purpose (short)	Check whether Port status is read back correctly and the PDoutValidity of NSR data is set to invalid
Equipment under test (EUT)	FS-Master + Tool
Test case version	1.1
Category / type	FS-Master test, test-to-pass
Specification (clause)	[3]10.3.5
Configuration / setup	FS-Master-Tester-System

TEST CASE	CONDITIONS / PERFORMANCE
Purpose (detailed)	Check whether the safety Port status can be read out using the SMI_PortStatus service and ArgBlock 0x9100. Check the output validity of the NSR PDout data that must be invalid before an PDOut SMI service has been issued.
Precondition	EUT: PORT_FSCOM SMTU: SMTU_STANDARD_STATE_32,
Procedure	a) SMI_PortStatus(0x9100) ;returns ArgBlock "FSPortStatusList" b) Evaluation 1) c) SMI_PDOut(invalid) d) Wait(2*Watchdog timeout) e) OE = SMTU_MixData_Get f) Evaluation 2) g) SMI_PDOut(valid) h) Wait(2*Watchdog timeout) j) OE = SMTU_MixData_Get k) Evaluation 3)
Test parameter	–
Post condition	–

TEST CASE RESULTS	CHECK / REACTION
Evaluation	1) Compare ArgBlock "FSPortStatusList" with assignments in "PORT_FSCOM" 2) Check Value of OE and check if any FS related Event occurs (see [4] Table B.2) 3) Check Value of OE and check if any FS related Event occurs (see [4] Table B.2)
Test passed	1,2) PortStatusInfo = SCL_ENABLED PortQualityInfo.Bit0/1 = 0 *;all PD valid* RevisionID = 0x11 TransmissionRate = COM2 MasterCycleTime ≥ 0x80 *;>33 ms* InputDataLength = 0x01 *PDInLength = 1, NSR only* OutputDataLength = 0x01 *;PDOutLength = 1, NSR only* VendorID = 0xFDE8 *;IO-Link Community* DeviceID = 0x002BD3 *;DID for SMTU* NumberofDiags = 0 DiagEntry0 = 0 DiagEntry1 = 0, and OE = invalid and no Event 3) OE = valid and no Event
Test failed (examples)	Any check deviating
Report	Values OK: <yes/no> <ok | nok>

13.3.3 TechparCRC volatile

Table 190 defines the test conditions for this test case.

Table 190 – TechparCRC_Volatile

TEST CASE ATTRIBUTES	IDENTIFICATION / REFERENCE
Identification (ID)	SDCI_FSTC_0205
Name	FSTCM_SMIS_TECHPARCRC_VOLATILE
Purpose (short)	Check whether configuration in commissioning mode is not stored in a non-volatile manner
Equipment under test (EUT)	FS-Master + Tool
Test case version	1.1
Category / type	FS-Master test, test-to-pass
Specification (clause)	[3] Table G.1
Configuration / setup	FS-Master-Tester-System

TEST CASE	CONDITIONS / PERFORMANCE
Purpose (detailed)	Check whether Port configuration with FSP_TechParCRC = “0” is not stored persistently.
Precondition	EUT: PORT_FSCOM SMTU: SMTU_STANDARD_STATE_32 *; no FST Parameter*
Procedure	a) SMI_ReadbackPortConfiguration(fs_config1)*; readback existing port configuration* b) Evaluation 1) c) SMI_PortConfig (ABPS_FSCONFIG_SAFECOM<FSP_TechParCRC=0>) *; Start commissioning mode* d) TM_AWAIT_PORT_STATUS(SCL_ENABLED) e) SMI_ReadbackPortConfiguration(fs_config2) *; readback updated configuration* f) Evaluation 2) g) Switch off EUT power supply *; power off the FS-Master* h) STM_WAIT(sufficiently long) *; wait for power off* i) Switch on EUT power supply *; power on the FS-Master* j) TM_WAIT_PORT_STATUS(SCL_ENABLED) *; await FS-Master communicative* k) SMI_ReadbackPortConfiguration(fs_config3)*; readback restored port configuration* l) Evaluation 3)
Test parameter	–
Post condition	–

TEST CASE RESULTS	CHECK / REACTION
Evaluation	1) memorize fs_config1 2) memorize fs_config2 3) memorize fs_config3
Test passed	fs_config2.FSP_TechParCRC = 0 and fs_config1 = fs_config3
Test failed (examples)	fs_config1 != fs_config3, or fs_config2.FSP_TechParCRC != 0
Report	TechParCRC restored: <yes/no> <ok | nok>

13.4 Master Events

13.4.1 Port specific Event Timeout

Table 191 defines the test conditions for this test case.

Table 191 – Port specific Event_Timeout

TEST CASE ATTRIBUTES	IDENTIFICATION / REFERENCE
Identification (ID)	SDCI_FSTC_0187
Name	FSTCM_REFD_PORTEVENT_TIMEOUT
Purpose (short)	Check whether Transmission Error Port Event timeout is generated correctly
Equipment under test (EUT)	FS-Master + Tool
Test case version	1.1
Category / type	FS-Master test, test-to-pass
Specification (clause)	[3] Table B.2
Configuration / setup	FS-Master-Tester-System
TEST CASE	**CONDITIONS / PERFORMANCE**
Purpose (detailed)	Check whether Port Event is generated correctly, e.g. a transmission Error (Timeout) occurred.
Precondition	EUT: PORT_FSCOM SMTU: SMTU_STANDARD_STATE_32 ; no FST Parameter
Procedure	a) SMI_PDOut (ABPS_PDOUT32<OutputDataLength=1>) b) SMTU_SPDU_Repetition (>WatchdogTimeout) ; Pause SCL on Device> WatchdogTimeout c) Wait on SMI_PortEvent ; returns ArgBlock "PortEvent" d) Evaluation 1)
Test parameter	–
Post condition	–
TEST CASE RESULTS	**CHECK / REACTION**
Evaluation	1) Check ArgBlock "PortEvent"
Test passed	EventCode = 0x2002 *; Transmission Error (Timeout)*
Test failed (examples)	No Event or EventCode incorrect
Report	Port Event OK: <yes/no> <ok | nok>

13.4.2 Port specific Event_CRC

Table 192 defines the test conditions for this test case.

Table 192 – Port specific Event_CRC

TEST CASE ATTRIBUTES	IDENTIFICATION / REFERENCE
Identification (ID)	SDCI_FSTC_0201
Name	FSTCM_REFD_PORTEVENT_CRC
Purpose (short)	Check whether Transmission CRC Error Port Event is generated correctly
Equipment under test (EUT)	FS-Master + Tool
Test case version	1.3
Category / type	FS-Master test, test-to-pass
Specification (clause)	[3] Table B.2
Configuration / setup	FS-Master-Tester-System

TEST CASE	CONDITIONS / PERFORMANCE
Purpose (detailed)	Check whether Port Event is generated correctly when a transmission error (CRC signature) occurred.
Precondition	EUT: PORT_FSCOM SMTU: SMTU_STANDARD_STATE_32 ;no FST Parameter
Procedure	a) SMI_PDOut (ABPS_PDOUT32<OutputDataLength=1>) b) SMTU_CRC_Error *;Send SPDU with invalid CRC for one cycle* c) Wait on SMI_PortEvent *;returns ArgBlock "PortEvent"* d) Evaluation 1)
Test parameter	–
Post condition	–

TEST CASE RESULTS	CHECK / REACTION
Evaluation	1) Check ArgBlock "PortEvent"
Test passed	EventCode = 0x2000 or EventCode = 0x2001 *;Transmission Error (CRC, Count)*
Test failed (examples)	No Event or EventCode incorrect
Report	Port Event OK: <yes/no> <ok | nok>

13.4.3 Port specific Event_Counter

Table 193 defines the test conditions for this test case.

Table 193 – Port specific Event_Counter

TEST CASE ATTRIBUTES	IDENTIFICATION / REFERENCE
Identification (ID)	SDCI_FSTC_0202
Name	FSTCM_REFD_PORTEVENT_COUNTER
Purpose (short)	Check whether Transmission Counter Error Port Event is generated correctly
Equipment under test (EUT)	FS-Master + Tool
Test case version	1.3
Category / type	FS-Master test, test-to-pass
Specification (clause)	[3] Table B.2
Configuration / setup	FS-Master-Tester-System

TEST CASE	CONDITIONS / PERFORMANCE
Purpose (detailed)	Check whether Port Event is generated correctly, e.g. a transmission Error (Timeout) occurred.
Precondition	EUT: PORT_FSCOM SMTU: SMTU_STANDARD_STATE_32 ; no FST Parameter
Procedure	a) SMI_PDOut (ABPS_PDOUT32<OutputDataLength=1>) b) SMTU_Counter_Error ; Send SPDU with invalid DCount ; for one safety cycle c) Wait on SMI_PortEvent ; returns ArgBlock "PortEvent" d) Evaluation 1)
Test parameter	–
Post condition	–

TEST CASE RESULTS	CHECK / REACTION
Evaluation	1) Check ArgBlock "PortEvent"
Test passed	EventCode = 0x2001 or EventCode = 0x2000 *;Transmission Error (Count, CRC)*
Test failed (examples)	No Event or EventCode incorrect
Report	Port Event OK: <yes/no> <ok | nok>

13.4.4 Port specific Event VerifyRecord

Table 194 defines the test conditions for this test case.

Table 194 – Port specific Event VerifyRecord

TEST CASE ATTRIBUTES	IDENTIFICATION / REFERENCE
Identification (ID)	SDCI_FSTC_0203
Name	FSTCM_REFD_PORTEVENT_VERIFY_RECORD
Purpose (short)	Check whether ISDU error (FSP_VerifyRecord) Port Event is generated correctly
Equipment under test (EUT)	FS-Master + Tool
Test case version	1.0
Category / type	FS-Master test, test-to-pass
Specification (clause)	[3] Table B.2
Configuration / setup	FS-Master-Tester-System
TEST CASE	**CONDITIONS / PERFORMANCE**
Purpose (detailed)	Check whether Port Event is generated correctly when an ISDU error occurred while writing the FSP_VerifyRecord.
Precondition	EUT: PORT_INACTIVE SMTU: SMTU_STANDARD_STATE_32 *; no FST Parameter*
Procedure	a) SMTU_RejectVerifyRecord *; Rejects writing the FSP_VerifyRecord* *; with ErrorCode 0x8020* *; (Service temporarily not available)* b) SMI_PortConfig (ABPS_FSCONFIG_SAFECOM) c) Wait on SMI_PortEvent *; returns ArgBlock "PortEvent"* d) Evaluation 1) e) TM_AWAIT_PORT_STATUS(PORT_DIAG) f) Evaluation 2)
	–
Post condition	–
TEST CASE RESULTS	**CHECK / REACTION**
Evaluation	1) Check ArgBlock "PortEvent" 2) Check PortStatus
Test passed	1) EventCode = 0x2007 *; ISDU Error (FSP_VerifyRecord)* 2) PortStatus = PORT_DIAG and DiagEntry.eventcode = 0x2007 (see 149 in [4]))
Test failed (examples)	No Event or EventCode incorrect Portstatus <> PORT_DIAG or DiagEntry has no eventcode
Report	Port Event OK: <yes/no> <ok | nok>

13.4.5 Port specific Event Config Error

Table 195 defines the test conditions for this test case. This test case is optional.

Table 195 – Port specific Event Config Error

TEST CASE ATTRIBUTES	IDENTIFICATION / REFERENCE
Identification (ID)	SDCI_FSTC_0204
Name	FSTCM_REFD_PORTEVENT_CONFIG_ERROR (optional)
Purpose (short)	Check whether port configuration errors are reported correctly. Test is disabled by default.
Equipment under test (EUT)	FS-Master with optional checking of FSP_VerifyRecord + Tool.
Test case version	1.0
Category / type	FS-Master test, test-to-pass
Specification (clause)	[3] Table B.2
Configuration / setup	FS-Master-Tester-System

TEST CASE	CONDITIONS / PERFORMANCE
Purpose (detailed)	Check whether Port Events are generated correctly when PortConfiguration errors occurred.
Precondition	EUT: PORT_POWER_OFF SMTU: SMTU_STANDARD_STATE_32 *; no FST Parameter*
Procedure	a) SMI_PortConfig (ABPS_FSCONFIG_SAFECOM<"config_change">) *; different configuration selected* b) Wait on SMI_PortEvent *; returns ArgBlock "PortEvent"* c) SMI_PortStatus(portstatus) *; read out portstatus* d) Evaluation 1) e) SMI_PortConfig (ABPS_FSCONFIG_SAFECOM) ' *; correct configuration selected* f) Wait on SMI_PortEvent *; returns ArgBlock "PortEvent"* g) Evaluation 2) h) Repeat from a) with next "config_change"
Test parameter	config_change = {Authent1=<different>, Port=<invalid>, FSP_AuthentCRC=<invalid>, FSP_ProtParCRC=<invalid>, FSP_Watchdog=<0>} event_code = {0x2003, 0x2004, 0x2005, 0x2006, 0x2009}
Post condition	–

TEST CASE RESULTS	CHECK / REACTION
Evaluation	For all test parameters: 1) Check ArgBlock "PortEvent" with EventCode = "event_code" appears, and portstatus = OPERATE 2) Check ArgBlock "PortEvent" with EventCode = "event_code" disappears
Test passed	EventCode = 0x2003 appears (1), and EventCode = 0x2003 disappears (2) EventCode = 0x2004 appears (1), and EventCode = 0x2004 disappears (2) EventCode = 0x2005 appears (1), and EventCode = 0x2005 disappears (2) EventCode = 0x2006 appears (1), and EventCode = 0x2006 disappears (2) EventCode = 0x2009 appears (1), and EventCode = 0x2009 disappears (2)
Test failed (examples)	No Event or EventCode incorrect or portstatus not equal to OPERATE
Report	Port Event (EventCode = 0x2003) appears: <yes/no> <ok | nok> Port Event (EventCode = 0x2003) disappears: <yes/no> <ok | nok> Port Event (EventCode = 0x2004) appears: <yes/no> <ok | nok> Port Event (EventCode = 0x2004) disappears: <yes/no> <ok | nok> Port Event (EventCode = 0x2005) appears: <yes/no> <ok | nok> Port Event (EventCode = 0x2005) disappears: <yes/no> <ok | nok> Port Event (EventCode = 0x2006) appears: <yes/no> <ok | nok> Port Event (EventCode = 0x2006) disappears: <yes/no> <ok | nok> Port Event (EventCode = 0x2009) appears: <yes/no> <ok | nok> Port Event (EventCode = 0x2009) disappears: <yes/no> <ok | nok>

13.5 Device Events

13.5.1 FS-Device Event

Table 196 defines the test conditions for this test case.

Table 196 – FS-Device Event

TEST CASE ATTRIBUTES	IDENTIFICATION / REFERENCE
Identification (ID)	SDCI_FSTC_0188
Name	FSTCM_REFD_FSDEVICEEVENTCORRECT
Purpose (short)	Check whether FS-Device Event is propagated correctly
Equipment under test (EUT)	FS-Master + Tool
Test case version	1.0
Category / type	FS-Master test, test-to-pass
Specification (clause)	[3]
Configuration / setup	FS-Master-Tester-System
TEST CASE	**CONDITIONS / PERFORMANCE**
Purpose (detailed)	Check whether FS-Device Event is propagated correctly, e.g. unexpected authentication code (0xB003)
Precondition	EUT: PORT_FSCOM SMTU: SMTU_STANDARD_STATE_32 *; no FST Parameter*
Procedure	a) SMI_PortConfig (ABPS_FSCONFIG_SAFECOM<FSCP_Authenticity1=2>) b) Wait(1s + FSP-MinShutdownTime + FSP_TimeToReady) c) Wait on SMI_DeviceEvent *; returns ArgBlock "DeviceEvent"* d) Evaluation 1)
Test parameter	–
Post condition	–
TEST CASE RESULTS	**CHECK / REACTION**
Evaluation	1) Check ArgBlock "DeviceEvent"
Test passed	EventCode = 0xB003 *; Unexpected authentication code*
Test failed (examples)	No Event or EventCode incorrect
Report	FS-Device Event OK: <yes/no> <ok | nok>

13.6 Safety function response time

13.6.1 General concepts and accuracies

Figure 15 illustrates the effects of the worst-case delay times (WCDT) and one fault delay times (OFDT) of the components involved in a safety function based on a pure FS-Master and FS-Device system. see Annex H.6 in [3], which requires for a

- a manufacturer/vendor of FS-Devices to provide the "worst-case delay time" (WCDT) value. WCDT is defined as the time from triggering an FS-Device (sensor) until the output shows a corresponding signal change or Process Data change. For an FS-Device (actuator) it is the time from signal change or Process Data change to the actuator's safe state.

- a manufacturer/vendor of FS-Devices to provide the "one fault delay time" (OFDT) value. The definition of OFDT is similar to WCDT, however in case of a fault within the FS-Device at the time of the measurement.

Therefore, since it is mandatory for all components to provide WDCT and OFDT in user manuals, FS-Master tools are enabled to provide values for the total worst case delay time (TWCDT) and safety function response time.

An FS-Master shall also provide values for FS-Master_WD (OFDT), usually derived from program processing duration and for IOL-S WD for the output side.

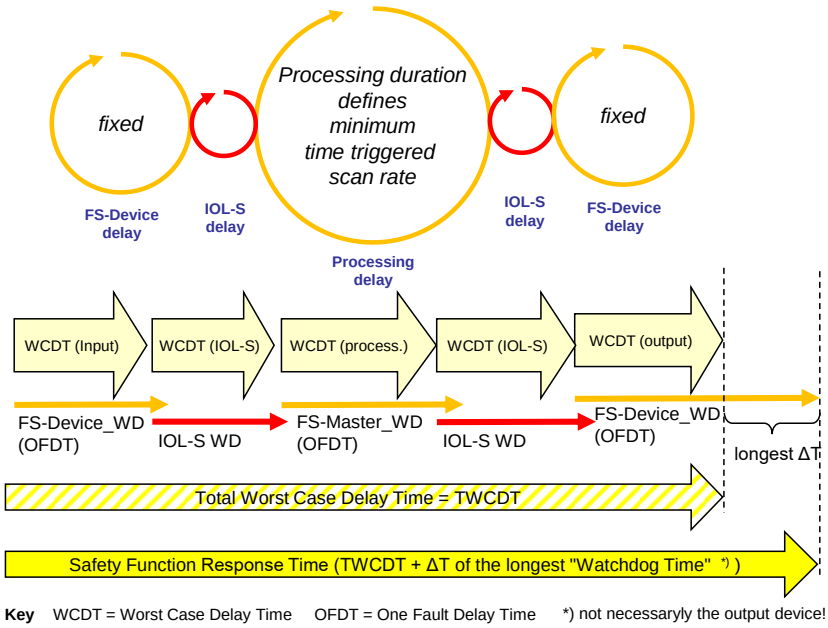

Figure 15 – SFRT of a stand-alone FS-Master with processing

Only one fault shall be assumed per trip. The watchdog time with the largest impact on the safety function response time (SFRT) shall be considered for a safety function. For a machine usually an overtravel measurement (usually at least 10 measurements) is performed.

Table 197 shows the accuracies and tolerances to be used for timings.

Table 197 – Accuracies and tolerances for timings

Item	Accuracy	Remarks
Measurement accuracy	+/- 1 %	–
Permitted watchdog time tolerance	+/- 10 %	–

Figure 16 illustrates the effects of the worst-case delay times (WDCT) and one fault delay times (OFDT) of the components involved in a safety function based on FS-Master and FS-

Devices integrated in a fieldbus functional safety communication profile (FSCP), see for example [10].

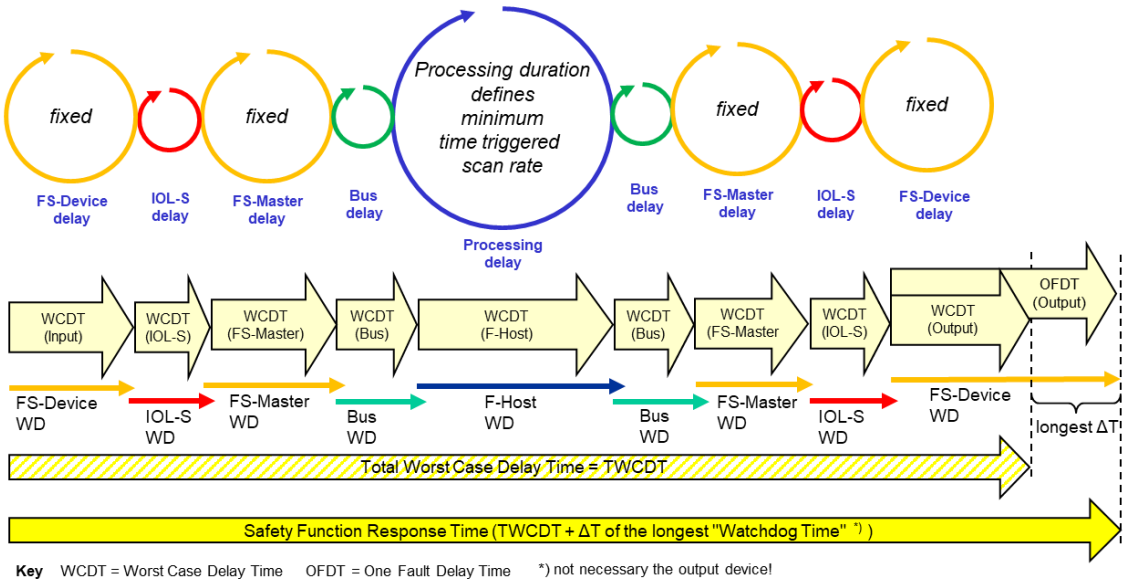

Figure 16 – SFRT including IOL-S and FSCP

Figure 17 illustrates, how the watchdog timer of an FS-Master is tested. The Safety Master Tester Unit (SMTU), playing the role of an FS-Device, is controlled in such a way that the response SPDU ("DCount i = 3") is delayed through artificial repetitions. For details see 13.6.2.

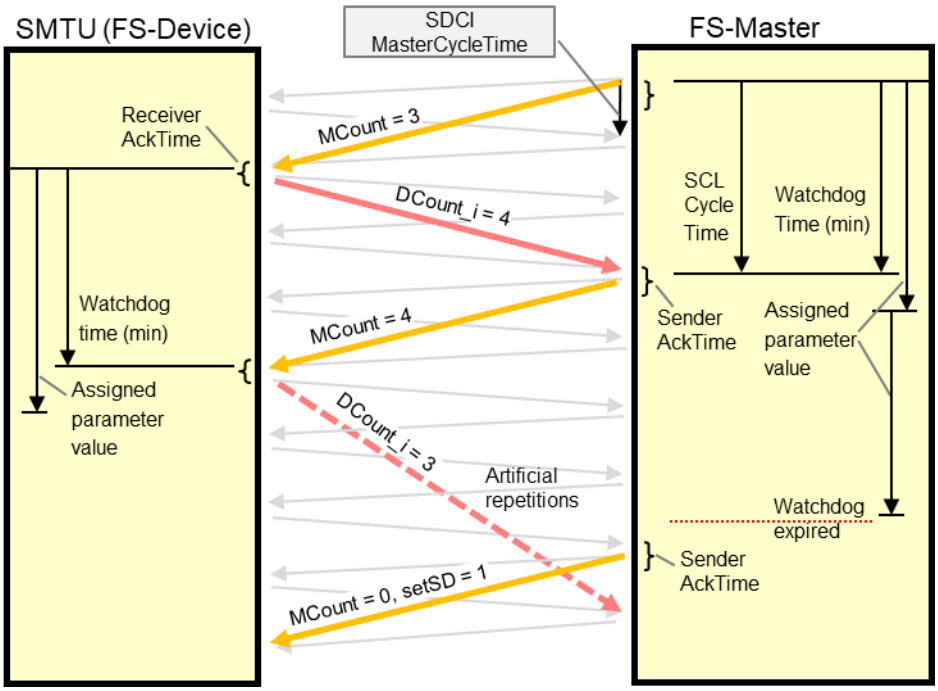

Figure 17 – Test of the FS-Master watchdog

The actual watchdog response time cannot be measured with IO-Link on-board equipment. This shall be measured by the manufacturer using development tools or determined via software analysis (safety assessment, see 8.3.3). It is however possible, to validate in a test case that the FS-Watchdog timeout is within certain limits. The IO-Link Interface Specification [2],A.3.7 provides a definition of the MinCycleTime that is a property of the Device.

The manufacturer of the IO-Link Device specifies the MinCycleTime of the Device.

$$MinCycleTime \quad = t_{bc,min}$$

In addition, the Manufacturer of the IO-Link FS-Device specifies the io-update time $t_{io,update}$, (see [3] A.2.6). Based on the description in [3], the io-update time shall cover the processing time of the SCL layer in the FS-Device plus the transmission time of the black channel including all repetitions and some synchronization delay. Thus the IO-update time shall fulfill the following requirement.

$$t_{io,update} \geq 6.6\, t_{bc,min} + t_{scl,d}$$

Where $t_{scl,d}$ is the processing time of the FS-Device, which is the time between the capturing of an update of the SPDU-Out from the FS-Master by the SCL and the updating of the SPDU-IN forwarded to the FS-Master. The io-update time is published in the IODD of the FS-Device as DefaultValue of the parameter FSP-Watchdog. With the Master tool, the value $t_{io,update}$ is extended by the processing time of the FS-Master $t_{scl,m}$ and the MinCycleTime $t_{bc,min}$, which is replaced by the selected nominal master cycle time

$$t_{bc,nom} \geq t_{bc,min}$$

The resulting Watchdog timeout t_{WD} is stored in the FSP-Watchdog parameter.

$$t_{WD} > 6.6\, t_{bc,nom} + t_{scl,d} + t_{scl,m}$$

The SCL Master cycle time $t_{scl,m}$ is a property of the FS-Master that must be made available by the Manufacturer of the FS-Master to the Master tool and the FS-Master tester. The duration of $t_{scl,m}$ covers the processing time between the capturing an SPDUIn from the FS-Device by the SCL and the update of the SPDUOut by the FS-Master.

For validating the FSWatchdog, the following assumptions are made:

- The test is executed under controlled conditions, thus no repetitions occur during the test.
- An update of the SCL state in the FS-Master is copied to SPDUOut within the effective IO-Link cycle time t_{bc}

$$0.99\, t_{bc,nom} \leq t_{bc} \leq 1.1\, t_{bc,nom}$$

- An update of SPDUIN is copied to the SCL of the FS-Master within $t_{scl.m} \leq t_{WD}$.
- The Watchdog Timeout t_{WD} shall be validated only by the SMTU.
- The SMTU observes $PD_{In,Out}$ and/or $SPDU_{In,Out}$ discretized by the effective IO-Link cycle time t_{bc}.
- The watchdog timeout value can be reduced to

$$t_{WD,test} \geq 2.2\, t_{bc,min} + t_{scl,m} + t_{scl,d}$$

The validation of the Watchdog timeout on the FS-Master is done by checking boundary conditions. First, it is checked that a Watchdog timeout never occurs on the FS-Master, when the SCL of the FS-Device responds within a time longestpass

$$t_{lp} \leq \; 0.9\, t_{wd,test} - 2\, t_{bc} - t_{scl,m}; \quad t_{lp} \geq 0$$

Secondly, it is checked that a Watchdog timeout always occurs on the FS-Master, when the SCL of the FS-Device responds at a time shortestfail

$$t_{sf} \geq 1.1\, t_{WD,test} + 2\, t_{bc} + t_{scl,m}$$

The prefixes 0.9 and 1.1 are reflecting the tolerance of the Watchdog timeout.

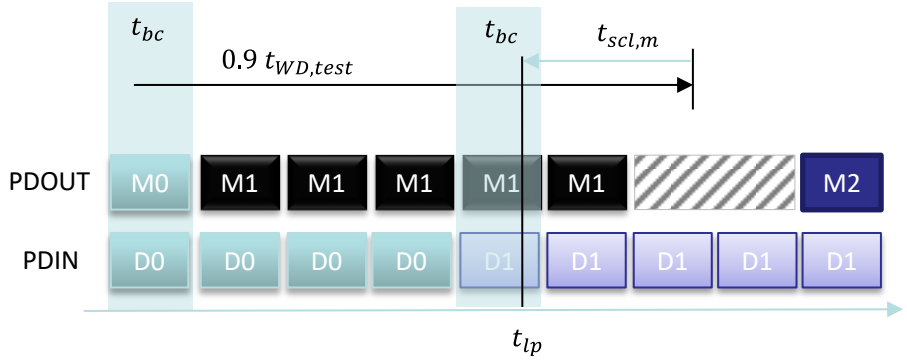

$$t_{lp} = 0.9\ t_{WD,test} - 2\ t_{bc} - t_{scl,m}$$

Figure 18 Longest SCL response $\boldsymbol{t_{lp}}$ that never leads to an FSWatchdog Timeout

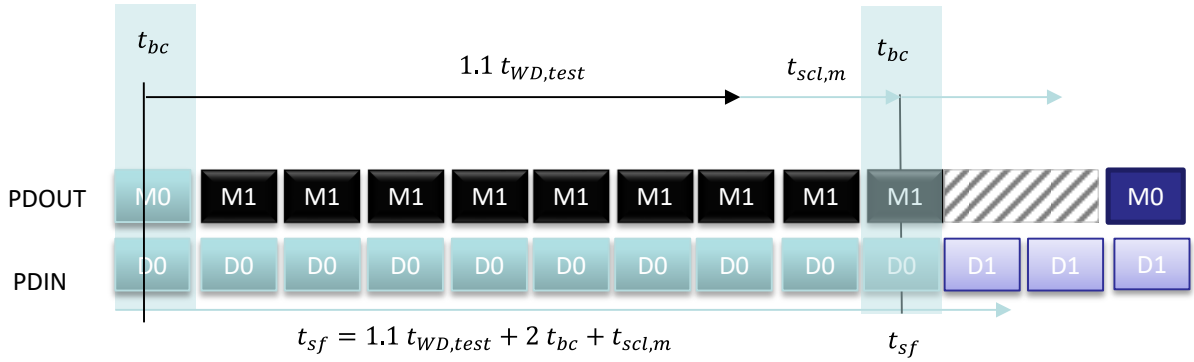

Figure 19 Shortest response $\boldsymbol{t_{sf}}$ that always leads to an FSWatchdog Timeout

In Figure 18 and Figure 19, M0, M1 or M2 are indicating MCount in SPDUOut of the FS-Master. D0 or D1 are indicating DCount in SPDUIn of the FS-Device.

The times are shortened respectively prolonged by the 2 times the black channel jitter t_{bc} and the SCL cycle time of the FS-Master as a second source of jitter due to the asynchronousity between black channel and SCL.

13.6.2 FS-Master watchdog test

Table 198 defines the test conditions for this test case.

Table 198 – FS-Master watchdog test

TEST CASE ATTRIBUTES	IDENTIFICATION / REFERENCE
Identification (ID)	SDCI_FSTC_0189
Name	FSTCM_SCLM_WATCHDOGPRECISION
Purpose (short)	Check whether the watchdog timeout reaction of the FS-Master meets expected timing constraints.
Equipment under test (EUT)	FS-Master
Test case version	1.1
Category / type	FS-Master test, test-to-pass
Specification (clause)	[3]
Configuration / setup	FS-Master-Tester-Unit (SMTU)

TEST CASE	CONDITIONS / PERFORMANCE
Purpose (detailed)	Check whether FS-Master's safety reaction time upon watchdog timeout lies within the expected limits considering the SCL cycle time of the FS-Master and given properties of the SMTU.
Precondition	EUT: Port config DEACTIVATED; Transmission rate = COM2 SMTU: SMTU_STANDARD_STATE_32 FS Master SCL cycle time $t_{scl,m}$, SCL cycle time of SMTU $t_{scl,d} = 25.2\,ms$
Procedure	a) Choose new Watchdog_value from first FSP_Watchdog in A) b) Update Verifyrecord with new Watchdog_value from A) c) Update longestpass (t_{lp}) and shortestfail (t_{sf}) with new values from A d) Perform ISDU-Write with Watchdog_value to FSP_Watchdog parameter e) Set PortConfig with current FSP_VerifyRecord e.g. via SMI_PortConfiguration using ArgBlock 0x8100 f) SMTU_Delay_SPDU (t_{lp}) *;return M_COUNT* g) Evaluation 1) h) Perform ISDU-Write with Watchdog_value to FSP_Watchdog parameter i) Set PortConfig with current FSP_VerifyRecord e.g. via SMI_PortConfiguration using ArgBlock 0x8100 j) SMTU_Delay_SPDU(t_{sf}) *;return M_COUNT* k) Evaluation 2) l) Repeat from c) 3 times m) Update watchdog value with next FSP_Watchdog from A) n) Repeat from b)
Test parameter	A) FSP protocol parameter record: *;MinCycleTime = 25.2 ms* FSP_Watchdog ={ $t_{WD} = 90\,ms + t_{scl,m}$, $t_{WD} = 140\,ms + t_{scl,m}$ } $t_{lp} = 0.9\,t_{WD} - t_{scl,m} - 55\,ms$ $t_{sf} = 1.1\,t_{WD} + t_{scl,m} + 55\,ms$ FSP_ProtVersion = defaultValue in IODD, FSP_ProtMode = defaultValue in IODD, FSP_IOStructCRC = defaultValue in IODD, FSP_TechParCRC = valid CRC signature *;responsibility of tester* FSP_ProtParCRC = valid CRC signature *;responsibility of tester*
Post condition	–

TEST CASE RESULTS	CHECK / REACTION
Evaluation	1) get M_COUNT
Test passed	1) M_COUNT <> 0 2) M_COUNT = 0
Test failed (examples)	Any check incorrect
Report	For every repetition 1) M_COUNT = <value> <ok | nok> 2) M_COUNT = <value> <ok | nok>

TEST CASE RESULTS	CHECK / REACTION

13.6.3 Integration Aspects

In 13.6.1, the general concepts are explained also for a more complex FS-Master integrated in a fieldbus's functional safety communication profile (FSCP) according to the IEC 61784-3 series. In this case, usually the FS-Master plays only the role of a mapper of Process Data from one safety communication system to the other.

The designer/manufacturer of such a mapping FS-Master/Gateway shall provide WCDT and OFDT for the mapping part to enable computer-aided approximation of a safety function response time. Integration specifications to FSCPs should comprise definitions and descriptions how to achieve these values.

13.7 Test with Reference FS-Devices

13.7.1 Test in regular automation environments

Table 199 defines the test conditions for this test case.

Table 199 – Test of FS-Master with Reference FS-Devices

TEST CASE ATTRIBUTES	IDENTIFICATION / REFERENCE
Identification (ID)	SDCI_FSTC_0199
Name	FSTCM_REFT_RD
Purpose (short)	Basic test of FS_Master with Reference FS-Devices
Equipment under test (EUT)	FS-Master, Master tool
Test case version	1.0
Category / type	Test of basic functionality of FS-Master and Master Tool with 3 reference FS-Devices
Specification (clause)	[4]
Configuration / setup	Standard setup of FS-Master System and Master Tool connected to 3 reference FS-Devices with IODDs and Dedicated Tools

TEST CASE	CONDITIONS / PERFORMANCE
Purpose (detailed)	Test of basic functionality of the EUT together with 3 reference FS-Devices to show that the EUT is able to establish a safety communication also in regular automation environments
Precondition	Setup of FS- Master with Master Tool, Engineering and PLC connected to reference FS-Devices
Procedure	For each reference FS-Device: a) Install Dedicated Tool b) Evaluation 1) c) Start Dedicated Tool and configure FST parameters and return FSP_TechParCRC d) Evaluation 2) e) Configure Port to SAFETYCOM f) Evaluation 3) g) Execute optional additional tests h) Evaluation 4)
Test parameter	-
Post condition	-

TEST CASE RESULTS	CHECK / REACTION
Evaluation	1) Check installation result 2) Check FSP_TechParCRC 3) Check safety communication 4) Check results of additional tests

TEST CASE RESULTS	CHECK / REACTION
Test passed	1) Installation of Device Tool was successful 2) FSP_TechParCRC is not “0” 3) Safety communication has started 4) Tests show expected results
Test failed (examples)	At least one test shows unexpected results
Report	Values OK : <yes/no>

14 FS-Master Tool tests

14.1 IODD import

Table 200 defines the test conditions for this test case.

Table 200 – IODD import

TEST CASE ATTRIBUTES	IDENTIFICATION / REFERENCE
Identification (ID)	SDCI_FSTC_0190
Name	FSTCM_TOOL_IODDIMPORT
Purpose (short)	IODD of the SMTU can be imported into FS-Master Tool
Equipment under test (EUT)	FS-Master + Tool
Test case version	1.0
Category / type	FS-Master Tool test, test-to-pass
Specification (clause)	[3]
Configuration / setup	EUT + IODD of SMTU (or any FS-Device)

TEST CASE	CONDITIONS / PERFORMANCE
Purpose (detailed)	Check whether IODD of the SMTU can be imported into FS-Master Tool and FSP_ParamDescCRC is correct.
Precondition	–
Procedure	a) Import IODD b) Evaluation 1) c) Evaluation 2)
Test parameter	IODD of SMTU
Post condition	–

TEST CASE RESULTS	CHECK / REACTION
Evaluation	1) Check import status (CRC signature, Display) 2) Check FSP_ParamDescCRC
Test passed	All checks correct
Test failed (examples)	Any check incorrect
Report	Values OK: <yes/no> <ok | nok>

14.2 IODD conventions (PD headlines colouring)

Table 201 defines the test conditions for this test case.

Table 201 – IODD conventions (PD headlines colouring)

TEST CASE ATTRIBUTES	IDENTIFICATION / REFERENCE
Identification (ID)	SDCI_FSTC_0191
Name	FSTCM_TOOL_IODDCONVENTIONS
Purpose (short)	IODD of the SMTU is displayed according to IODD rules
Equipment under test (EUT)	FS-Master + Tool
Test case version	1.0
Category / type	FS-Master Tool test, test-to-pass
Specification (clause)	[3]
Configuration / setup	EUT + IODD of SMTU
TEST CASE	**CONDITIONS / PERFORMANCE**
Purpose (detailed)	Check whether IODD of the SMTU is displayed according to IODD rules, e.g. headers of Process Data and FS parameters in yellow colour.
Precondition	–
Procedure	a) Import and open IODD of the SMTU b) Evaluation 1)
Test parameter	FS parameter in user manual
Post condition	–
TEST CASE RESULTS	**CHECK / REACTION**
Evaluation	1) Check display
Test passed	Headers of Process Data and FS parameters in yellow colour according to IODD rules
Test failed (examples)	Display not according to IODD rules
Report	Values OK: <yes/no> <ok | nok>

14.3 FS parameters visible completely

Table 202 defines the test conditions for this test case.

Table 202 – FS parameters visible completely

TEST CASE ATTRIBUTES	IDENTIFICATION / REFERENCE
Identification (ID)	SDCI_FSTC_0192
Name	FSTCM_TOOL_IODDDISPLAYCOMPLETE
Purpose (short)	IODD FS parameter of the SMTU are displayed completely and appropriately
Equipment under test (EUT)	FS-Master + Tool
Test case version	1.0
Category / type	FS-Master Tool test, test-to-pass
Specification (clause)	[3]
Configuration / setup	EUT + IODD of SMTU (or any FS-Device) + user manual

TEST CASE	CONDITIONS / PERFORMANCE
Purpose (detailed)	IODD FS parameter of the SMTU are displayed completely and appropriately
Precondition	–
Procedure	a) Import and open IODD of the SMTU b) Display all FSP parameters c) Evaluation 1) d) Display all FST parameters e) Evaluation 2)
Test parameter	FS parameter in user manual
Post condition	–

TEST CASE RESULTS	CHECK / REACTION
Evaluation	1) Compare all FSP parameters with user manual 2) Compare all FST parameters with user manual
Test passed	All comparisons correct or tolerable (no misunderstandings)
Test failed (examples)	Any comparison incorrect
Report	Comparisons OK: <yes/no> <ok | nok>

14.4 FS-Device parameterization

Table 203 defines the test conditions for this test case.

Table 203 – FS-Device parameterization

TEST CASE ATTRIBUTES	IDENTIFICATION / REFERENCE
Identification (ID)	SDCI_FSTC_0193
Name	FSTCM_TOOL_FSTPARAMETERS
Purpose (short)	FST parameterization is possible
Equipment under test (EUT)	FS-Master + Tool
Test case version	1.0
Category / type	FS-Master Tool test, test-to-pass
Specification (clause)	[3]
Configuration / setup	EUT + IODD of SMTU (or any FS-Device)

TEST CASE	CONDITIONS / PERFORMANCE
Purpose (detailed)	FS-parameterization is possible
Precondition	–
Procedure	a) Import IODD b) Establish communication with SMTU c) Modify FS parameter d) Evaluation 1)
Test parameter	FST parameter in user manual
Post condition	–

TEST CASE RESULTS	CHECK / REACTION
Evaluation	1) Compare SMTU behavior with description in SMTU user manual
Test passed	All checks correct or tolerable (no misunderstandings)
Test failed (examples)	Any check incorrect
Report	Behavior OK: <yes/no> <ok | nok>

14.5 Dedicated Tool operation

Table 204 defines the test conditions for this test case.

Table 204 – Dedicated Tool operation

TEST CASE ATTRIBUTES	IDENTIFICATION / REFERENCE
Identification (ID)	SDCI_FSTC_0194
Name	FSTCM_TOOL_COMMDEDITOOL
Purpose (short)	Dedicated Tool of the SMTU can communicate with Master Tool
Equipment under test (EUT)	FS-Master + Tool
Test case version	1.0
Category / type	FS-Master test, test-to-pass
Specification (clause)	[3]
Configuration / setup	EUT + IODD of SMTU + Dedicated Tool from SMTU

TEST CASE	CONDITIONS / PERFORMANCE
Purpose (detailed)	FS-Master Tool invokes Dedicated Tool and passes over FST parameter via TPF. Subsequently, calculation of TechParCRC upon parameter changes takes place. Parameter values and TechParCRC are returned to FS-Master Tool via TBF ("Back Channel"). After parameter changes in FS-Master Tool, an update of the parameter values in the Dedicated Tool shall not occur automatically but only upon invocation of the Dedicated Tool. Check whether Dedicated Tool of the SMTU can communicate with FS-Master Tool.
Precondition	–
Procedure	a) Launch/invoke Dedicated Tool b) Evaluation 1) c) Try changing parameter values in FS-Master Tool d) Evaluation 2) e) Close Dedicated Tool f) Evaluation 3) g) Modify FST parameter values in FS-Master Tool h) Relaunch Dedicated Tool i) Evaluation 4) j) Evaluation 5) k) Perform commissioning of SMTU l) Evaluation 6)
Test parameter	–
Post condition	–

TEST CASE RESULTS	CHECK / REACTION
Evaluation	1) Check availability of TechParCRC display (decimal value) in Dedicated Tool (memorize CRC value) 2) Editing of values in FS-Master Tool shall be blocked 3) Check identical TechParCRC display (decimal value) in FS-Master Tool (see 1)) 4) Compare parameter values in displays of Dedicated Tool and FS-Master Tool (parameter values shall match) 5) Compare FSP_TechParCRC on FS-Master Tool with TechParCRC of Dedicated Tool (CRC values should differ due to parameter changes) 6) Check behavior of FS-Master system with connected SMTU
Test passed	All checks correct
Test failed (examples)	Any check incorrect
Report	Values OK: <yes/no> <ok | nok>

15 Environmental tests

15.1 General

Annex H in [2] defines the basic EMC tests for the SDCI communication part of an FS-Master/FS-Device system. Clause 5.4.2 in [2] specifies environmental conditions (e.g. electrical safety) especially for FS-Master with Port Class B.

It depends on the technology of an FS-Device and the countries of deployment, whether additional EMC tests or environmental tests are required to achieve for example a CE mark in Europe.

15.2 Product specific standards

Usually, the sector specific EMC standard IEC 61326-3-1 or the generic EMC standard 61000-6-7 are relevant for FS-Master.

For FS-Devices, there are several EMC standards, including but not limited to:

- Product standard IEC 61496-1 (Electro-sensitive protective equipment)
- Product standard IEC 60947-5-3 (Proximity switches)
- Sector standard IEC 61326-3-1 (Factory automation)
- Generic standard IEC 61000-6-7 (in case of no sector or product standard, such as in case of drives)

The following rule applies: Product standards shall be observed if available, otherwise sector standard or then generic standard.

15.3 EMC tests

EMC tests in respect of a particular phenomenon are defined in the IEC 61000-4-x series. Details for the respective test set-ups are described in Annex H.1.6 in [2] and in 4.4.

15.4 Test report templates

Tests are required for the following phenomena:

- Electrostatic discharge (ESD: IEC 61000-4-2)
- Electromagnetic field (HF: IEC 61000-4-3)
- Fast transients (Burst: IEC 61000-4-4)
- Surge protection (Surge: IEC 61000-4-5): optional, depending on deployment
- Conducted radio frequency (CRF: IEC 61000-4-6)

Usually, the test levels and durations exceed the values of NSR devices. A special performance criterion "DS" allows the devices to enter a Defined State at these extended "stress" tests, which is supposed to be safe in safety functions.

A passed EMC test is a precondition for a Manufacturer Declaration of Conformity. It shall comprise statements on the results of the above EMC tests. The forms in [8] may be used if they contain the appropriate information.

Annex A
(normative)

Test configurations, principles, and tools

Tolerances of test signal generators and measurement equipment shall be considered to assure that min- and max values are reached.

A.1 Measurement circuits / setups

A.1.1 Measurement circuits for static FS-Master parameter tests

Figure A.1 illustrates the measurement circuits for static FS-Master parameter tests in 5.2.

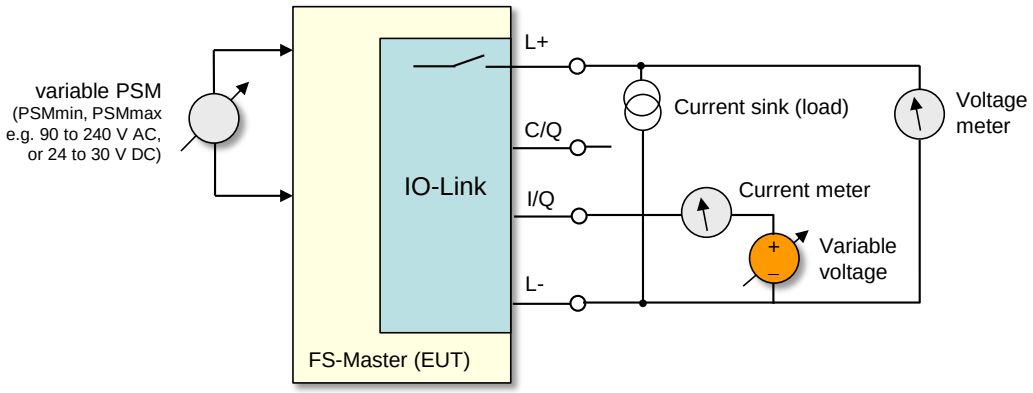

Figure A.1 – Measurement circuits for static FS-Master parameter tests

A.1.2 Measurement circuits for static FS-Device parameter tests

Figure A.2 illustrates the measurement circuits for static FS-Device parameter tests in 5.3. Method ① or ② can be applied.

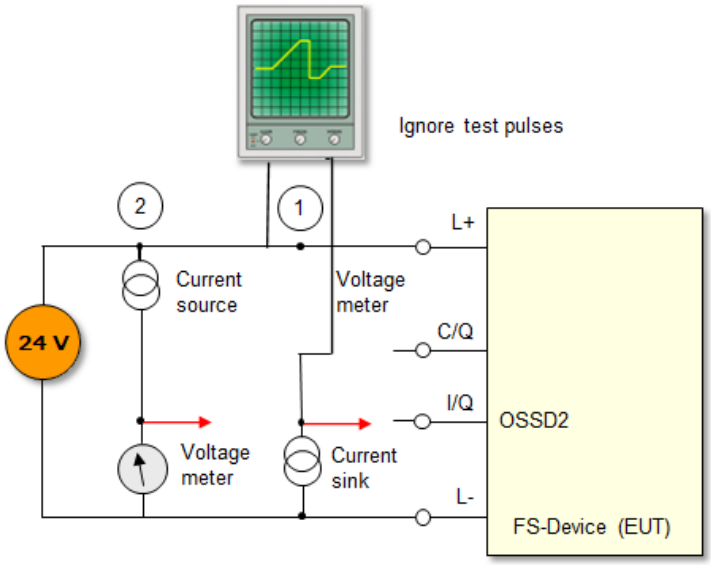

Figure A.2 – Measurement circuits for static FS-Device parameter tests

A.1.3 Measurement circuits for dynamic FS-Master parameter tests

Figure A.3 illustrates the measurement circuits for dynamic FS-Master parameter tests in 5.4

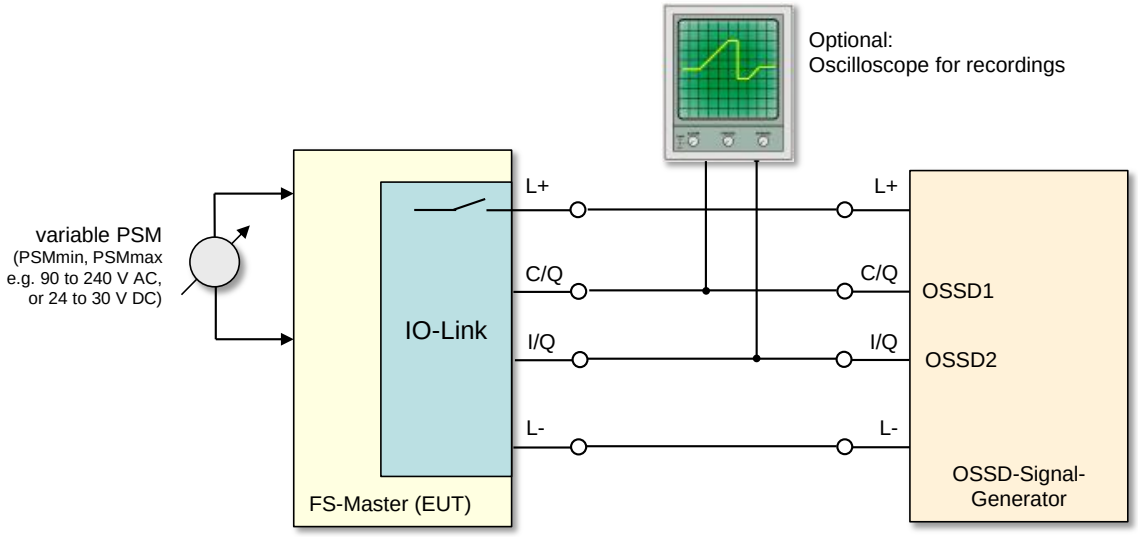

Figure A.3 – Measurement circuits for dynamic FS-Master parameter tests

A.1.4 Measurement circuits for dynamic FS-Device parameter tests

Figure A.4 illustrates the measurement circuits for dynamic FS-Device parameter tests in 5.5.

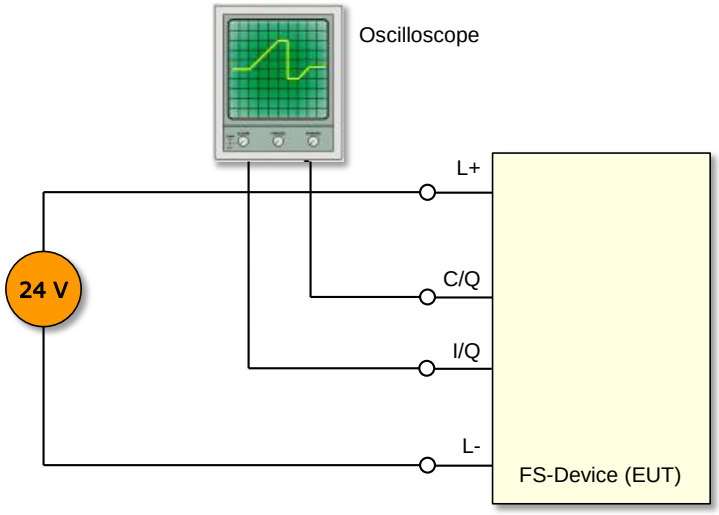

Figure A.4 – Measurement circuits for dynamic FS-Device parameter Tests

A.2 Test tools

A.2.1 Overview

Seven tools have been identified supporting the performance of the test cases in this document:

- "Upper-Tester" (UT) for SCL protocol conformance testing, see A.2.2
- "FS-Master tester system" including the "Safety Master Tester Unit" (SMTU), see A.2.3
- "FS-Device tester" (FSDT), see A.2.4
- "IODD Checker Tool", see A.2.5
- Reference FS-Master/Tool and FS-Devices, see A.2.6
- "EMC-Test tool" (optional)

A.2.2 Principles of SCL protocol conformance testing

In case of IO-Link Safety, the conformance test is a black box test verifying the IUT (Implementation Under Test) against the specification [3] at defined PCO (Point of Control and Observation).

The IUT for IO-Link-Safety is the FS-Master state machine or the FS-Device state machine. It is embedded in the DUT (Device Under Test) and has the following interfaces:

- IO-Link communication interface (SPDU)
- IO-Link SCL interface to "Mapping" (FS-Master) or "Technology" (FS-Device)

In order to test the "Mapping/Technology" interface, a special "test application" would normally be required at the DUT. This "test application" is supposed to apply and check test patterns at the SCL interface inputs/outputs and thus requires control by the tester performing the test scripts.

For the sake of simplicity, IO-Link Safety uses the non-safety part of IO-Link messages as "test control channel" in order to remotely access the "test application" as shown in Figure A.5. In this case "the test application" is called "Upper Tester" (UT).

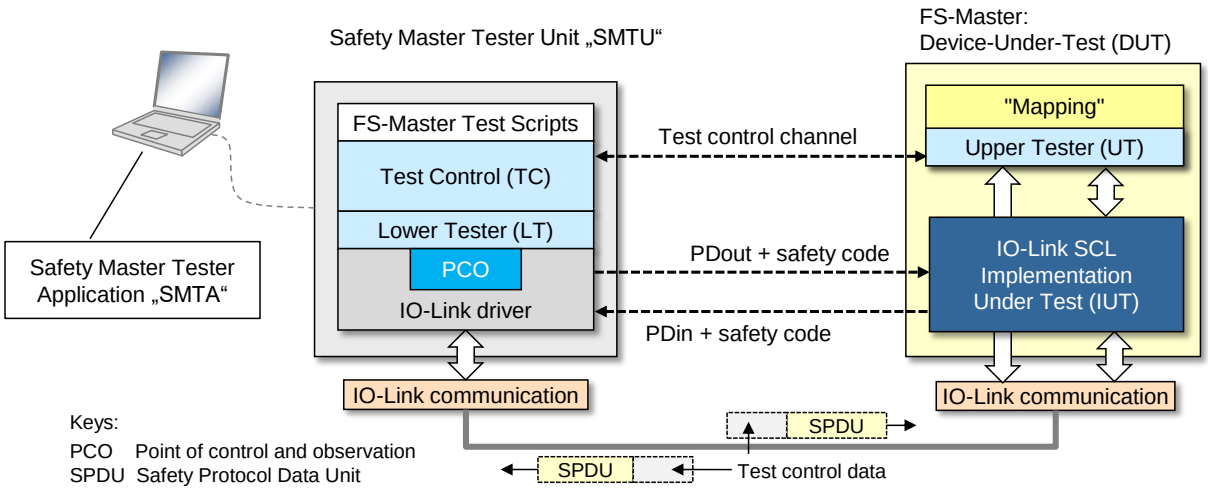

Figure A.5 – Principle of FS-Master SCL testing

The UT is embedded in the IO mapping part of the safety gateway to an FSCP as shown in Figure A.6. It is only active during testing and controlled by certain values of the FSP parameter "FSP_ProtMode" (see [3] Annex A.2.5). These values are not visible in the IODD of an FS-Device and cannot be set by an FS-Master Tool. Solely the FS-Master Tester system is enabled.

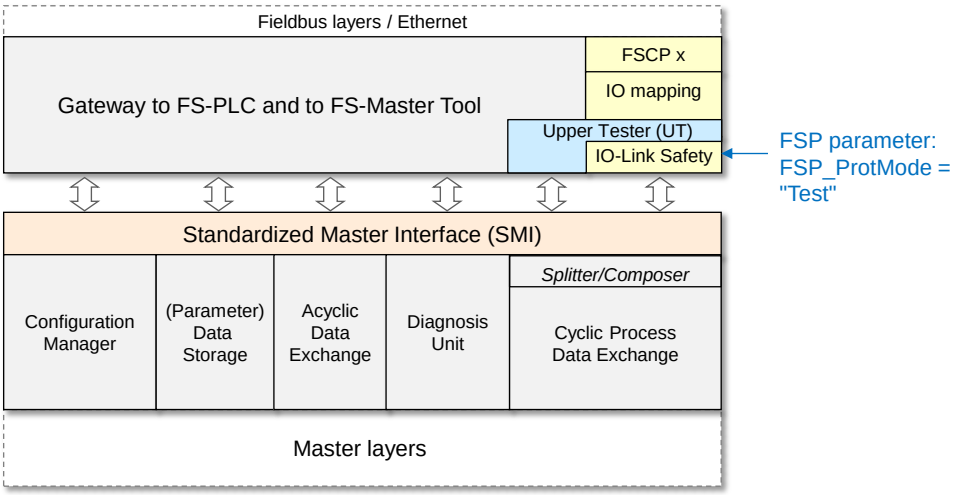

Figure A.6 – Remote Upper Tester (UT) as "test application"

This allows for a quite simple "test application" by just copying data between the safety and non-safety transmission parts as shown in detail in Figure A.7. Thus, the test patterns ("FS-Master Test Scripts") for the FS-Master set and check all safety process data and signals of the communication interface (SPDU) as well as all safety process data and signals of the "Mapping" interface.

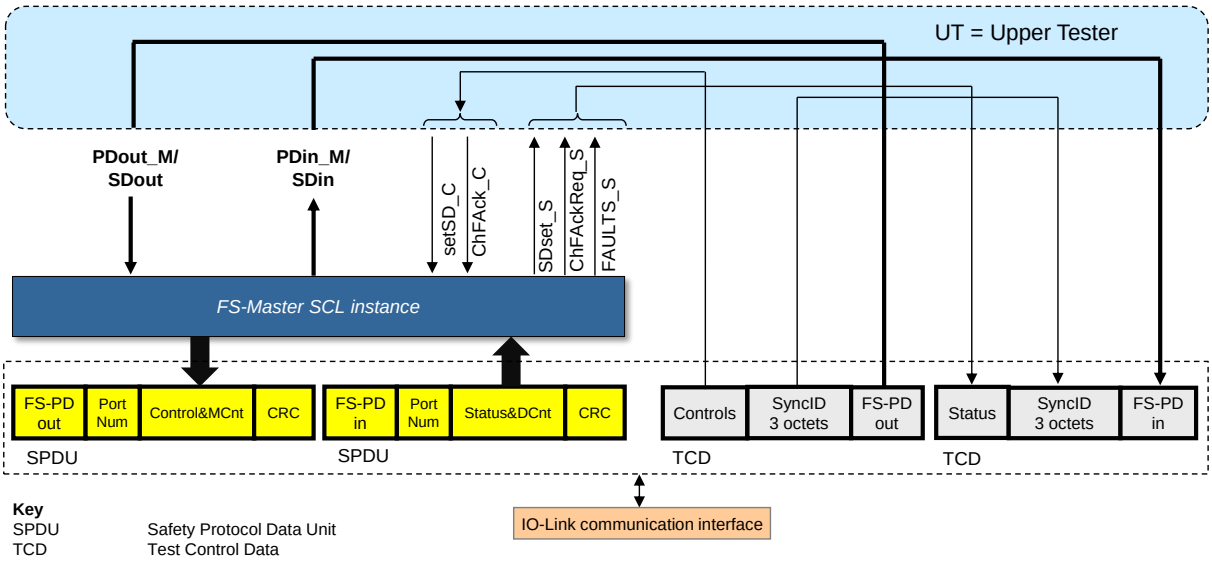

Figure A.7 – Upper Tester logic operations (copy)

Figure A.8 shows how synchronization check of data (test patterns) is achieved through an 8 bit counter (TestSyncCounter) within the "test control channel" in case of "FSP_ProtMode" = "Test1" (16 bit CRC) and "Test2" (32 bit CRC) (see Table 172).

The Octets for test message identifications "TestMessageIDhigh" and "TestMessageIDlow" shall be treated as "reserved".

ProtMode "Test1"

Octet0	Octet1	Octet2	Octet3	Octet4	Octet5
Process Data1 safe	Process Data2 safe	Port Number safe	Cntrl+Cnt/ Status+Cnt, safe	CRC 16-1 safe	CRC 16-2 safe
PDs1	PDs2	PNs	CSsafe	CRC1	CRC2

Octet6	Octet7	Octet8	Octet9	Octet10	Octet11
Cntrl+Cnt/ Status+Cnt, non-safe	TestSync Counter	Test Message IDhigh	Test Message IDlow	Process Data1 non-safe	Process Data2 non-safe
CSnon-safe	Sync	MessID1	MessID2	PDns1	PDns2

SyncID

ProtMode "Test 2"

Octet0	Octet1	Octet2	Octet3	Octet4	Octet5	Octet6	Octet7
Process Data1 safe	Process Data2 safe	Port Number safe	Cntrl+Cnt/ Status+Cnt, safe	CRC 32-1 safe	CRC 32-2 safe	CRC 32-3 safe	CRC 32-4 safe
PDs1	PDs2	PNs	CSsafe	CRC1	CRC2	CRC3	CRC4

Octet8	Octet9	Octet10	Octet11	Octet12	Octet13
Cntrl+Cnt/ Status+Cnt, non-safe	TestSync Counter	Test Message IDhigh	Test Message IDlow	Process Data1 non-safe	Process Data2 non-safe
CSnon-safe	Sync	MessID1	MessID2	PDns1	PDns2

SyncID

Figure A.8 – Data transfer in safety and test control channel

Details are defined for the actual FS-Master SCL protocol tester tool in A.2.3.

Many FS-Device DUTs have a fixed technology application and limited resources such that no test control channel and no remote Upper Tester can be established. Thus, a simplified FS-Device SCL testing has been chosen as shown Figure A.9. It results in the following restrictions for the test creation and performance.

The test scripts for the FS-Device set and check all safety process data and signals of the communication interface (SPDU). A static configuration with safety process data >0 and SDset_DS = 0 is defined for the parameters of the "Fixed technology" interface. An FS-Device shall always provide valid process data values for the test.

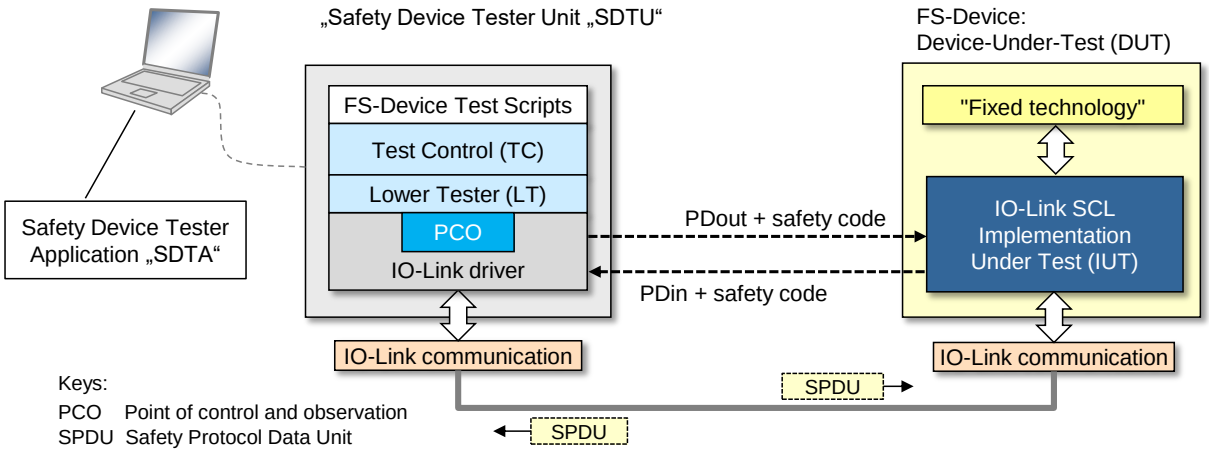

Figure A.9 – Principle of FS-Device SCL testing

A.2.3 FS-Master tester system

Figure A.10 shows the possible configurations for an FS-Master tester system including SCL testing. This configuration can be used for all test cases such as VerifyRecord, FS-Master/FS-Device configuration, and SCL protocol test scripts, but not for physical layer tests.

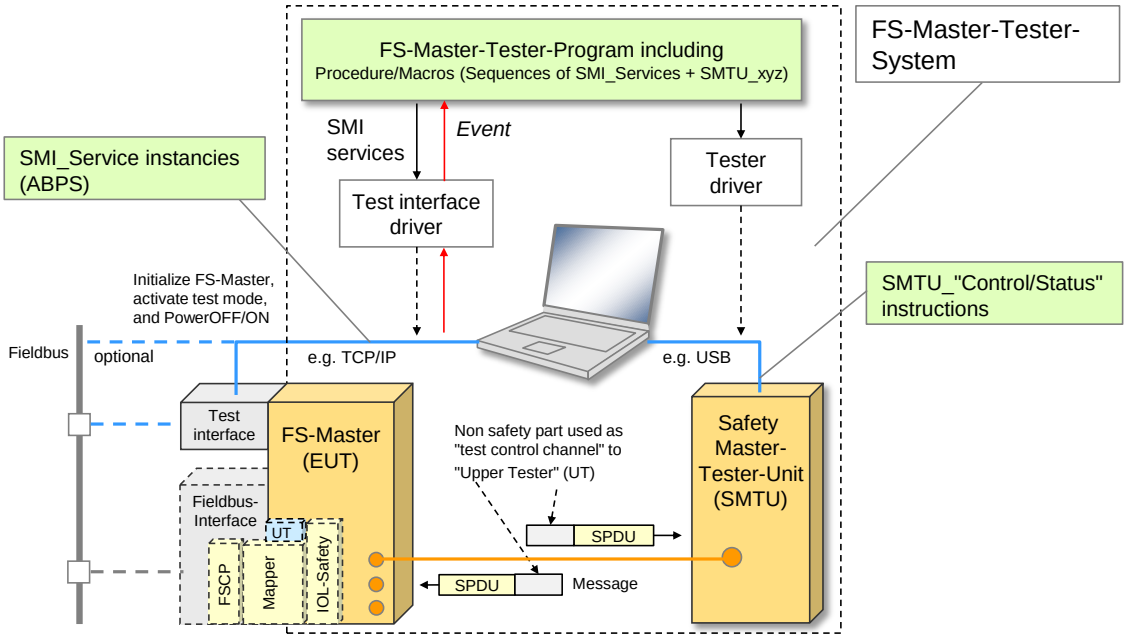

Figure A.10 – FS-Master tester system

Input for the FS-Master-Tester-Program are test scripts based on test cases in this document, mainly coded in XML and secured for possible audits by assessment bodies. Test results (verdict) shall be logged together with test scripts and versions of the FS-Master-Tester-Program for later reproduction. Thus, versioning of testers is required.

In order to drive the tests, the FS-Master-Tester-Program uses SMI services defined in [2] and specific SMI services defined in [3], as well as MTU instructions defined in [8] and SMTU instructions defined in A.4.7.

A.2.4 FS-Device tester (FSDT)

Figure A.11 shows the possible configurations for an FS-Device tester (FSDT). With the help of the IODD of the FS-Device, the test can be adjusted to the fixed IO data structures of the FS-Device.

Test results (verdict) shall be logged together with test scripts and versions of FS-Device Tester Software for later reproduction. Thus, versioning of testers is required.

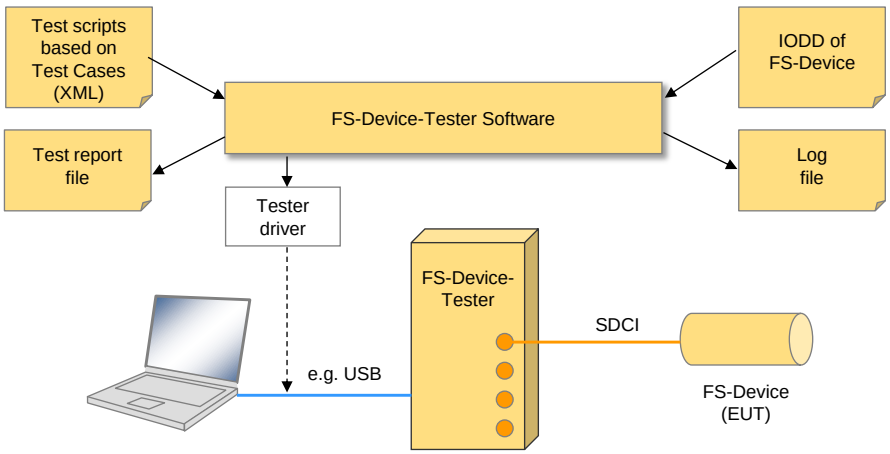

Figure A.11 – FS-Device SCL Protocol tester

A.2.5 IODD Checker Tool

The existing Checker Tool for non-safety IODDs shall be augmented according to Clause 6.2.

A.2.6 Reference FS-Master/FS-Master Tool and FS-Devices

A number of test cases can only be performed in an economic manner by reference FS-Master/FS-Master Tool and FS-Devices. The IO-Link Community identifies such a reference based on suggestions of the IO-Link Safety working group. The working group can revise suggestions in case the reference does not meet specified requirements. After a start-up phase it is expected that at least 3 different reference FS-Devices are available.

A.2.7 Responsibility of test equipment manufacturers

A number of test cases are dealing with verification, configuration, and parameterization. Some of them can be performed automatically, some of them only manually. It is up to the manufacturers of test equipment whether they support all or some of these test cases in the particular test equipment. However, they are responsible for complete support of all test cases for either FS-Device or FS-Master including FS-Master Tool for the manufacturer declaration. For test cases not covered by the automated test equipment, manufacturers of test equipment shall provide instructions and auxiliary means, how the tests can be performed manually.

A.3 Assessment and audits of test equipment

There are no functional safety-related requirements on the hardware of the test equipment such as redundancy. However, tester software development shall observe the rules defined in IEC 61508 or ISO 13849 for T2 level.

Therefore, functional safety assessment by an accredited or recognized assessment body shall be performed for the equipment. The test scripts shall be "sealed" by CRC signature.

If competence or test centers are established by the IO-Link Community, audits by the IO-Link Community and an assessment body are required for personal and test equipment.

A.4 Components of FS-Master test cases

A.4.1 Overview

Figure A.12 provides an overview of the components of FS-Master test cases, comprising EUT- and SMTU-preconditions as well as safety test macros, ArgBlock parameter sets (ABPS) for SMI service instances, and SMTU instructions to control and monitor the SMTU.

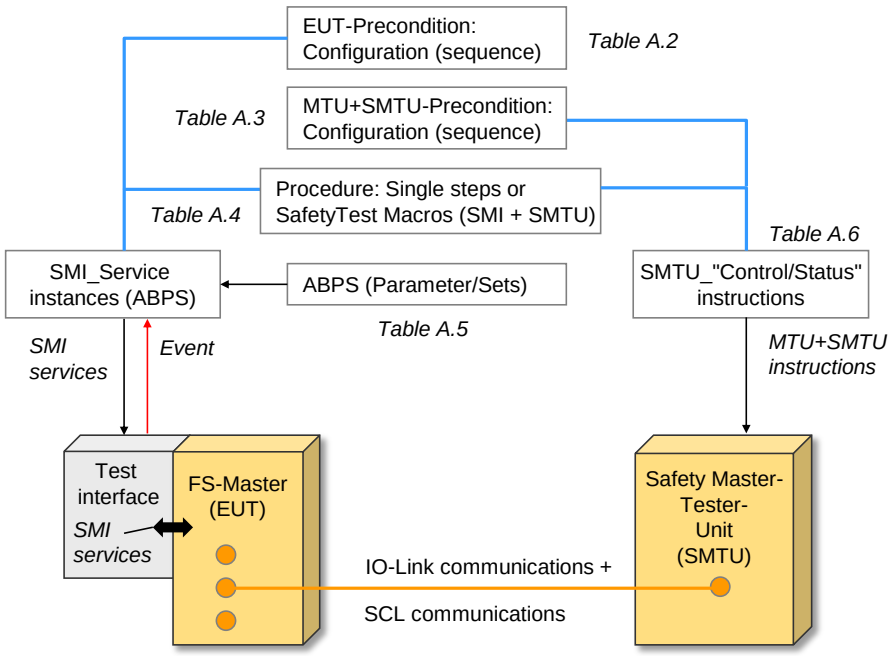

Figure A.12 – Components of FS-Master test cases

SMI service instances and MTU/SMTU instructions can be directly used to define test procedure steps. In certain cases, it is advantageous to use macros combining SMI service instances and

MTU/SMTU-Instructions. Flow control expressions such as "wait until", "repeat from", etc. can supplement these macros. They shall be named intuitively and shall be preceded by the prefix "STM_" for safety test macro.

A.4.2 EUT preconditions (FS-Master Port)

Table A.205 shows preconditions of the EUT in addition to the preconditions for NSR testing defined in [8]. They can represent a description of a state or a sequence of activities to reach a certain state of the EUT. Parameters are listed in Table A.209.

Table A.205 – Preconditions of the EUT

Identifier	Description of state or activities to reach state
PORT_OSSDe	Port is in OSSDe Mode *; SMI_FSPortConfiguration*
PORT_FSCOM	Port is in SAFETYCOM Mode *; pure FS-PD exchange*
PORT_POWER_OFF	Port Power L+ switched off *; SMI_PortPowerOffOn*
PORT_FSP_PARAMETERS	FSP-Parameters are stored in FS-Master for VerifyRecord *; SMI_FSPortConfiguration*

A.4.3 SMTU preconditions

Table A.206 shows macros of preconditions of the SMTU playing the role of a controllable and observable FS-Device. They describe values (instances) of parameters of a state or a sequence of activities to reach a certain state of the SMTU.

Table A.206 – Preconditions of the SMTU

Identifier	Description of state or activity to reach state
SMTU_STANDARD_STATE_32	Change/expand the MTU_STANDARD_STATE in [8] to: DPP1(M-sequenceCapability) = 0x1B *; PREOPERATE = TYPE1_2,* *; OPERATE = TYPE_2_V* *; ISDU supported* *; OD=2* DPP1(ProcessDataIn) = 0x9F *; PDIn = 32 octets* DPP1(ProcessDataOut) = 0x9F *; PDOut = 32 octets* DPP1(DeviceID) = 0x002BD3 NOTE 1 *; DID = 11219* DPP1(MinCycleTime)=0x6F *; 25.2 ms* Mandatory Indices: Index 0x0012 (ProductName) = "SMTU" *; UTF8 coding* Index 0x4200 (Authenticity record): FSCP_Authencity = xxx(non-zero) NOTE 4 *; "Armed"* FSP_Port = yyy (non-zero) NOTE 4 *; valid Port Number* FSP_AuthentCRC = CRC-16 *; valid signature for Authenticity* Index 0x4201 (Protocol record): FSP_ProtVersion = 0x01 *; current protocol version* FSP_ProtMode = 0x02 *; 25 octets FS-PD maximum* FSP_Watchdog = yyy NOTE 2 *; reasonable time value!* FSP_IOStructCRC = CRC-16 *; valid signature for IO_Struct* FSP_TechParCRC = CRC-32 *; valid signature for no FST-* *; Param.* FSP_ProtParCRC = CRC-16 *; valid signature for Protocol* *; record* FSP-MinShutdownTime = 100 *; 1 second* FSP_TimeToReady = 500 *; 5 seconds* Index 0x4212 (FSP_ParamDescCRC) = CRC-32*; from IODD*

NOTE 1 Only this ID can be overwritten by FS-Master for compatibility tests (see clause 8.5 in [8]). It differs from the ID value in [8].

NOTE 2 A reasonable value should be chosen allowing watchdog tests without long test durations (<< 1 min)

NOTE 3 The SMTU shall issue Events within 1 second after its occurrence.

NOTE 4 To be preconfigured based on the Authentication of the FS-Master and the target Port.

NOTE 5 Length of SPDUIn/SPDUOut: 31 Octets for SMTU_STANDARD_STATE_32,

A.4.4 SafetyTestMacros (STM) of the FS-Master-Tester-Program

Table A.207 shows SafetyTestMacros of the Safety-Master-Tester-Program for both EUT (FS-Master) and SMTU. All STMs shall return after ≤ 30 s (default Test_Timeout).

Table A.207 – SafetyTestMacros of the FS-Master-Tester-Program

STM identifier	Variable	Test Service Action to enter mode	Comment
STM_SCL_START32	–	Set FS-Master to SCL state "wait on SPDU" and set SMTU to SCL state "not ready"	–
STM_WAIT_TIMEOUT	–	Wait for FSP_Watchdog timeout	–
STM_WAIT	Timeout	FS Master Tester pauses for the indicated duration	in ms

A.4.5 SMI Event handling

The Safety-Master-Tester-Program uses the mechanisms as specified in Annex A.4.5 in [8].

A.4.6 SMI ArgBlock parameter sets (ABPS)

The ArgBlock parameter sets (ABPS) defined in Annex A.4.6 in [8] are supplemented for safety. The same rules apply.

Table A.208 – ArgBlock Parameter Sets (ABPS) for safety

ABPS[3]	ArgBlock	Element	Type	Value
ABPS_FSCONFIG_ OSSDE	FSPortConfigList	ArgBlockID	Unsigned16	0x8100
		PortMode	Unsigned8	51 (OSSDE)
		…	…	Don't care (≠ 0)
		SPDUInLength	Unsigned8	1 Octet (fixed)
		…	…	Don't care (≠ 0)
		FSP-MinShutdownTime	Unsigned16	100 (Unit 10 ms)
		FSP_TimeToReady	Unsigned16	500 (Unit 10 ms)
ABPS_FSCONFIG_ SAFECOM	FSPortConfigList	ArgBlockID	Unsigned16	0x8100
		PortMode	Unsigned8	49 (SAFETYCOM)
		Validation&Backup	Unsigned8	3 ("V1.1", B+R)
		I/Q Behavior	Unsigned8	0 (not supported)
		PortCycleTime	Unsigned8	0 (AFAP)
		VendorID	Unsigned16	0xFDE8
		DeviceID	Unsigned32	0x002BD3 (different)
		InputDataLength	Unsigned8	31 (total)
		OutputDataLength	Unsigned8	31 (total)
		FSCP_Authenticity1	Unsigned32	1
		FSCP_Authenticity2	Unsigned32	1
		FSP_Port	Unsigned8	1 (Default)
		FSP_AuthentCRC	Unsigned16	64191 (0xFABF)
		FSP_ProtVersion	Unsigned8	0x01

[3] If some values in the ABPS are overwritten for certain test cases (see [8]), corresponding CRCs shall be adjusted accordingly.

ABPS[3]	ArgBlock	Element	Type	Value
		FSP_ProtMode	Unsigned8	0x02 (32 bit CRC)
		FSP_WatchdogTime	Unsigned16	1000 ms (0x03E8)
		FSP_IOStructCRC	Unsigned16	57211 (0xDF7B)
		FSP_TechParCRC	Unsigned32	1 (0x00000001)
		FSP_ProtParCRC	Unsigned16	57126 (0xDF26)
		IO_DescVersion	Unsigned8	1 (Version 1)
		SPDUInLength	Unsigned8	31
		TotalOfInBits	Unsigned8	0
		TotalOfInOctets	Unsigned8	1
		TotalOfInInt16	Unsigned8	0
		TotalOfInInt32	Unsigned8	6
		SPDUOutLength	Unsigned8	31
		TotalOfOutBits	Unsigned8	0
		TotalOfOutOctets	Unsigned8	1
		TotalOfOutInt16	Unsigned8	0
		TotalOfOutInt32	Unsigned8	6
		FSP-MinShutdownTime	Unsigned16	100 (Unit 10 ms)
		FSP_TimeToReady	Unsigned16	500 (Unit 10 ms)
ABPS_PDOUT6	PDOUT	ArgBlockID	Unsigned16	0x1002
	OE		Unsigned8	1
	OutputDataLength		Unsigned8	6
	PDO0		Unsigned8	11
	PDO1		Unsigned8	22
	PDO2		Unsigned8	33
	PDO3		Unsigned8	44
	PDO4		Unsigned8	55
	PDO5		Unsigned8	66
ABPS_PDOUT32	PDOut	ArgBlockID	Unsigned16	0x1002
		OE	Unsigned8	1
		OutputDataLength	Unsigned8	32
		PDOut [i=0…31]	Unsigned8	3*(i+1)
ABPS_PORT_OFF	PortPowerOffOn	ArgBlockID	Unsigned16	0x7003
		PortPowerMode	Unsigned8	1 (OFF permanent)
		PortPowerOffTime	Unsigned16	0
ABPS_PORT_ON	PortPowerOffOn	ArgBlockID	Unsigned16	0x7003
		PortPowerMode	Unsigned8	2 (ON permanent)
		PortPowerOffTime	Unsigned16	0
ABPS_POWER_CYCLE	PortPowerOffOn	ArgBlockID	Unsigned16	0x7003
		PortPowerMode	Unsigned8	0 (OFF-ON cycle)
		PortPowerOffTime	Unsigned16	0x01F4 (~ 1 s)

A.4.7 SMTU instructions

Instructions of the Master-Tester-Program for the MTU specified in Annex A.4.7 in [8] are supplemented for safety. Table A.209 shows (fixed) instructions of the Safety-Master-Tester-Program for the SMTU (Safety-Master-Tester-Unit). Every SMTU instruction returns the specified parameters defined in "Return value".

Table A.209 – SMTU instructions

Name	Parameter	Return value	Definition
SMTU_Authent_Set	Authent1, Authent2, Port, CRC	–	Set deviating values
SMTU_PowerState_Get	–	1= Power On 0= Power Off	Returns current state of L+ power
SMTU_PowerOffTime_Start	–	–	Starts measurement of the PowerOffOn time
SMTU_PowerOffTime_Get	–	PowerOffTime	Returns measured PowerOffTime in ms after a PowerOffOn cycle
SMTU_Delay_SPDU	delay in ms	M_COUNT	SMTU to check Watchdog timeout 1) Keep SPDUIN DCount unchanged for delay if MCount gets 1 2) update DCount with first cycle after delay 3) Return when MCount changes or 2.2*FSP_Watchdog after MCount got 1
SMTU_MixData_Get	–	SR, NSR, OE	Readback mixed Process Data from SMTU
SMTU_NSR_Set	NSR, PQI	–	Sets NSR Process Data in SMTU
SMTU_Pause	Pause time in seconds	–	SMTU does not respond during pause
SMTU_Ready_Wait	t2R, tRP	–	Start-up of FS-Device
SMTU_SPDU_Repetition	Time in seconds	–	Artificially repeat SPDU
SMTU_SPDU_Change	–	–	SMTU to wait until SPDU changed. Usually this is an MCount or DCount value.
SMTU_VerifyRecord_Get	–	VerifyRecord	Returns entire VerifyRecord
SMTU_CRC_Error	–	–	Sends the next SPDU with invalid CRC
SMTU_Counter_Error	–	–	Sends the next SPDU with invalid DCount value (expected DCount + 1)
SMTU_RejectVerifyRecord	–	–	Return an ISDU error on the next FSP_VerifyRecord write with error code 0x8020 (Service Temporarily Not Available)

A.4.8 Fictive IODD for SMTU

The FS-Master tester system provides a fictive IODD for the SMTU.

Annex B
(normative)

Assessment and certification

B.1 General

In case of safety for machinery, a manufacturer declaration is only sufficient for a product to be launched, if the manufacturer fulfils certain preconditions. Otherwise, functional safety assessments by assessment bodies are required based on international standards such as IEC 61508, IEC 62061, or ISO 13849. There are three types of assessment objects in IO-Link Safety:

- Specification (see [3]),
- SCL-stacks and software tools,
- Functional safety products such as FS-Device and FS-Master including Master-Tools.

The actual assessment of IO-Link Safety can only comprise a concept approval of the specification ([4]) and companion documents as a precondition for the conformity of implementations (see B.4).

Since it is possible to implement the safety communication layers (SCL) of IO-Link Safety in a completely hardware-independent manner, manufacturers can save quite some effort and time if pre-certified SCL-stacks and software tools are available on the market. Preconditions are described in B.5.2.

Procedures and constraints for functional safety products are described in detail in B.5.

B.2 Safety policy

In order to prevent and protect the manufacturers and vendors of FS-Masters and FS-Devices from possibly misleading understandings or wrong expectations and negligence actions regarding safety-related developments and applications the following shall be observed and explained in each training, seminar, workshop and consultancy.

- Any non-safety-related device automatically will not be applicable for safety-related applications just by using fieldbus or IO-Link communication and a safety communication layer. The safety technology part of a safety device shall be approved for a Safety Integrity Level (SIL) or Performance Level (PL) suitable for the intended safety functions. The IO-Link Safety part shall be implemented and approved for the same SIL/PL or better.
- In order to enable a product for safety-related applications, appropriate development processes according to safety standards shall be observed (see IEC 61508, IEC 62061, ISO 13849) and an assessment from a competent assessment body or authorized manufacturer department shall be achieved.
- The manufacturer/vendor of a safety product is responsible for the correct implementation of the safety communication layer technology, the correctness and completeness of the product documentation and information.
- Supplemental safety-related information to the regular specification in [3] shall be observed for implementation, test and assessment if applicable. Normally, this information is provided by the working group as response to a change request (CR) within the CR-database that is in state "implementation" and approved by an assessment body. The working group can decide to publish these CRs through a separate "Corrigendum" document for download on the IO-Link website.

B.3 Obligations for international business

As a rule, the international safety standards are accepted (ratified) globally. However, since safety technology in automation is relevant to occupational safety and the concomitant insurance risks in a country, recognition of the rules pointed out here is still a sovereign right. The national "Authorities" decide on the recognition of assessment reports. The observation of additional national regulations may be required.

B.4 Concept approval of IO-Link Safety

For the approval of the safety concepts of IO-Link Safety the following has been provided by the community:

- Specification of IO-Link Safety ([3])
- Documentation of the modelling, the model checking, and the simulation including fault injection of the IO-Link safety communication layer (SCL)
- Document "Safety considerations" with Functional Safety Management, calculation of relevant Residual Error Rates, and software tool chain FMEA
- Document "Document Management and Working Group rules"

B.5 Product assessment and certification

B.5.1 Overview

Products within the domain of IO-Link Safety can be pre-certified software stacks or safety devices.

B.5.2 Pre-certified software stacks

Software shall be valid for the architecture required by the certain SIL or PL, for example redundancy in case of SIL3 or PLe. The requirements for compliant items according to IEC 61508-3 shall be observed for the assessment of a pre-certified SCL-stack.

Software shall be "sealed" to protect it from unintended changes. The user is only permitted to adapt the interfaces and keep the core part of the software untouched in order to keep the certificate.

B.5.3 Certified FS-Devices and FS-Masters

Figure B.1 below illustrates the certification procedures of FS-Device and FS-Master.

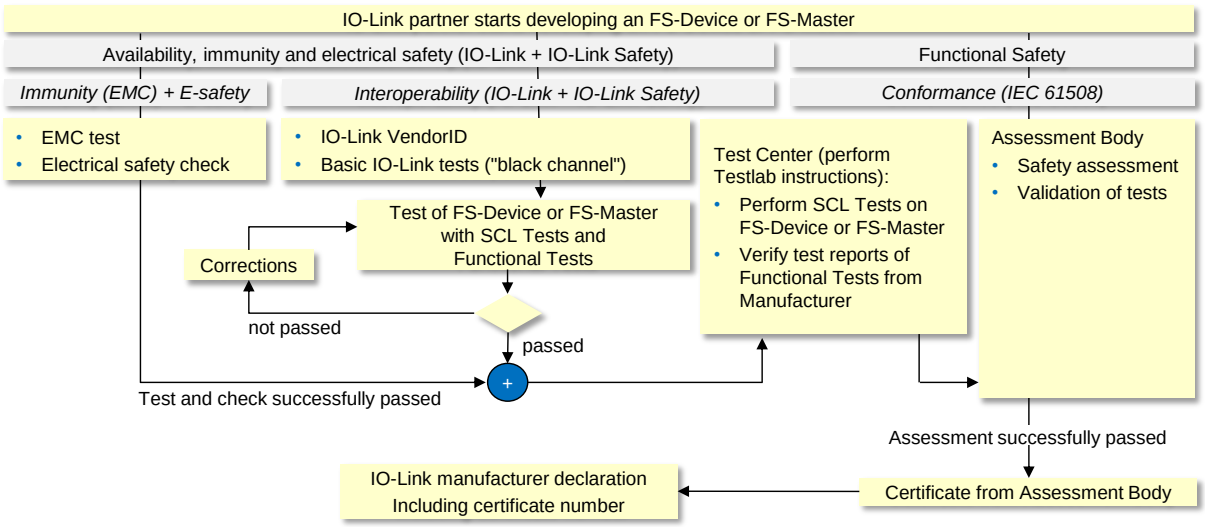

Figure B.1 – Assessment of FS-Device and FS-Master

Test, assessment, and certification of FS-Devices and FS-Masters comprise three aspects:

- Conformity with regulations, for example European Directives such as Electromagnetic Compatibility (EMC – IEC 61000-6-7) and Low Voltage Directive (electrical safety – IEC 61010-2-201) with possibly deviating issues depending on the standards to be considered (generic, domain, or product),

- IO-Link Interoperability, that means conformity of the FS-Device with the IO-Link specifications: The IO-Link community arranged for Functional Tests (test tool suite) based on this document and supported by Technology Providers,
- Conformance of functional safety development process according to at least one of IEC 61508, IEC 62061, ISO 13849-1 or if required other suitable safety standards.

NOTE Usually, from a fieldbus/FSCP point-of-view, the FS-Master is a fieldbus device and shall be developed, tested, and assessed according to the interoperability/conformity rules of the individual fieldbus/FSCP. The result is a certificate of the fieldbus organization.

B.5.4 Usage of Functional Tests and SCL Tests

In Figure B.1 Functional Tests and SCL Tests are mentioned. The Test Systems for FS-Device and FS-Master may implement both kinds of tests, however separated from each other in order and under different conditions.

SCL Tests are safety-related and thus safety assessed and certified. The SCL Tests shall be embedded in the tester software without changing the semantics of the SCL test scripts. The corresponding tests check whether the protocol software of an FS-Device or FS-Master is performed as specified in [3]. General requirements for test tools are given in A.3. With respect to the SCL Tests, the test tools shall in particular fulfil the following requirements:

- Test laboratory Instructions, created by the IO-Link Community, describing the behavior and handling of the test tools and their constraints as well as configuration management.
- Prove that each and every test case of the SCL Tests has been performed in accordance with the SCL test scripts.
- Prove that each deviation of the FS-Master or FS-Device responses from the expected responses as given by the SCL test scripts is detected by the test system.
- SCL Tests are fixed, versioned and "locked/sealed" by signature (e.g. CRC) and must not be changed during an update of the test system.

Functional Tests can be variable to a certain extent and be adjusted to customer requirements. The corresponding test cases are specified in this document. An update of the Functional Tests and the corresponding test system is possible without safety assessment as long as the SCL Tests keep untouched.

While developers can perform tests during development to ensure a high degree of conformity/interoperability with IO-Link and IO-Link Safety, this is not enough for functional safety. Additional requirements are given below.

Four parties are involved in the procedure of test and assessment:

- The manufacturer of an IO-Link product, responsible for performing conformance tests with test tools (Functional Tests),
- The FS-Test-Center, responsible for verification and approval of tests. FS-Test-Centers are accredited by the IO-Link Community and audited periodically. They are performing tests and checks according to "Test Lab Instructions" approved by the IO-Link Community.
- The Assessment Body, verifying and validating the product and its development.
- The IO-Link business office, managing the manufacturer declarations of conformity.

The procedure of test and assessment consists of the following steps:

1) Manufacturer performs basic IO-Link Tests (“Black Channel”) during and at the end of development, based on the IO-Link Test specifications if applicable for FS-Masters or FS-Devices.

2) Manufacturer performs additional safety tests (“FS-Device or FS-Master”) as well as some “Black Channel” extensions such as Ready Pulse, VerifyRecord, etc., during and at the end of development, based on IO-Link Safety Test & Assessment specification, V1.1.

3) Manufacturer cares for Physical Layer testing and in case high voltages are used, an electrical safety test before handing over to the FS-Test Center should be done to protect its personnel.

4) The manufacturer contracts an FS-Test-Center and hands over the FS-Device or FS-Master including Device Tools, IODD, Engineering, etc., together with the reports of the activities listed in the points 1 to 3 above including identification of the Device / Master, HW and SW. The FS-Test Center sends back to the manufacturer an “FS-Test Report” based on the results of its testing and verification activities.

5) Manufacturer provides this “FS Test Report” to the Assessment Body as prerequisite for the assessment procedure.

6) The Assessment Body checks beside all needed evidences additional safety related test reports like safety related EMC-Tests, electrical safety test, etc., which are required for the safety certificate that will be finally handed over to the manufacturer when all activities have been successfully completed.

7) Finally, the Manufacturer completes the manufacturer's declaration referencing the safety certificate based on a standardized template which might be forwarded to the IO-Link Business Office to be published in the approved component list (ACL).

B.6 Grandfathering rules

In future releases of this document, grandfathering rules will be necessary once the "black channel", i.e. the IO-Link layer stack is changed in an FS-Master or in an FS-Device.

Same is true for SCL stack changes in an FS-Master or in an FS-Device.

Annex C
(informative)

Information on testing of FS-Devices and FS-Master/Tools

Information about test laboratories, which test and validate the conformity of IO-Link Safety products such as FS-Masters and FS-Devices with IO-Link specifications can be obtained from the following organization:

IO-Link Community
c/o PROFIBUS Nutzerorganisation e.V.
Ohiostrasse 8
76149 Karlsruhe
GERMANY
Phone: +49 721 986197-0
Fax: +49 721 986197-11
E-Mail: info@io-link.com
URL: www.io-link.com

Annex D
(normative)

Manufacturer declaration for safety devices

A dedicated manufacturer declaration for FS-Devices and FS-Masters can be downloaded from the download area in www.io-link.com.

Annex E
(informative)
Listing of FS test cases

E.1 Listing of FS test cases sorted by IDs

Table E.1 shows the Test cases and its references.

Table E.1 – FS test cases sorted by IDs

FSTC ID	FSTC Name	Reference
FSTC_0001	FSTCM_PHYL_PWR1_SWITCHABLE	Table 12
FSTC_0002	FSTCM_PHYL_OSSD_HIGHVIMIQ	Removed
FSTC_0003	FSTCM_PHYL_OSSD_LOWVIMIQ	Removed
FSTC_0004	FSTCM_PHYL_OSSD_VHYSMCI	Removed
FSTC_0005	FSTCM_PHYL_OSSD_LOADIQ	Removed
FSTC_0006	FSTCD_PHYL_OSSD_HSRESVOLT	Removed
FSTC_0007	FSTCD_PHYL_OSSD_LSRESVOLT	Removed
FSTC_0008	FSTCM_PHYL_INTF_OSSDSENS	Removed
FSTC_0009	FSTCM_PHYL_INTF_DISCREPANCY	Removed
FSTC_0010	FSTCM_PHYL_INTF_TESTPULSERES	Removed
FSTC_0011	FSTCM_PHYL_INTF_READYDETECT	Table 13
FSTC_0012	FSTCM_PHYL_INTF_WAKEUPTOREADYDELAY	Table 14
FSTC_0013	FSTCD_PHYL_OSSD_DISCREP	Removed
FSTC_0014	FSTCD_PHYL_INTF_TESTPULSPERIOD	Removed
FSTC_0015	FSTCD_PHYL_INTF_TESTPULSDURATION	Removed
FSTC_0016	FSTCD_PHYL_INTF_READYPULSDUR	Table 15
FSTC_0017	FSTCD_PHYL_INTF_READY2OSSD	Table 16
FSTC_0018	FSTCI_IODD_FSPD_IODDPARAMDESCCRC	Table 19
FSTC_0019	FSTCI_IODD_FSPD_DEDICTOOL	Table 20
FSTC_0020	FSTCD_CONF_INFO_DOCUMENTS	Table 21
FSTC_0021	FSTCD_CONF_INFO_CONNECTCABLE	Table 22
FSTC_0022	FSTCD_CONF_INFO_DEFAULTBEHAVIOR	Table 23
FSTC_0023	FSTCD_CONF_FSPD_PORTINVAL	Table 24
FSTC_0024	FSTCD_CONF_FSPD_AUTHENTCRCINVAL	Table 25
FSTC_0025	FSTCD_CONF_FSPD_PROTVINVAL	Table 26
FSTC_0026	FSTCD_CONF_FSPD_PMODEINVAL	Table 27
FSTC_0027	FSTCD_CONF_FSPD_WDOGRANGE	Table 28
FSTC_0028	FSTCD_CONF_FSPD_PRCRCINVAL	Table 29
FSTC_0029	FSTCD_CONF_DEFAULTFST	Table 31
FSTC_0030	FSTCD_CONF_IODDFSTPAR	Table 32
FSTC_0031	FSTCD_CONF_CRCDEDTOOL	Table 33
FSTC_0032	FSTCD_CONF_SWTOOSSD	Table 34
FSTC_0033	FSTCD_CONF_SETUPCOMMI	Table 35
FSTC_0034	FSTCD_CONF_SETUPARMED	Table 36
FSTC_0035	FSTCD_PARM_VRFY_ARMED	Table 37
FSTC_0036	FSTCD_PARM_VRFY_COMMISTEST	Table 38

FSTC_0037	FSTCD_PARM_VRFY_ARMEDNOVFY	Table 39
FSTC_0038	FSTCD_PARM_VRFY_TESTNOVFY	Table 40
FSTC_0039	FSTCD_PARM_VRFY_TECHPARN0	Table 41
FSTC_0040	FSTCD_PARM_VRFY_TECHPAR0	Table 42
FSTC_0041	FSTCD_PARM_VRFY_AUTH1WRONG	Table 43
FSTC_0042	FSTCD_PARM_VRFY_AUTH2WRONG	Table 44
FSTC_0043	FSTCD_PARM_VRFY_PORTWRONG	Table 45
FSTC_0044	FSTCD_PARM_VRFY_AUTHCRCWRG	Table 46
FSTC_0045	FSTCD_PARM_VRFY_PPARCRCWRG	Table 47
FSTC_0046	FSTCD_PARM_VRFY_TPARCRCWRG	Table 48
FSTC_0047	FSTCD_PARM_VRFY_IOSTCRCWRG	Table 49
FSTC_0048	FSTCD_PARM_VRFY_WDTIMEINVL	Table 50
FSTC_0049	FSTCD_PARM_VRFY_PVERSINVL	Table 51
FSTC_0050	FSTCD_PARM_VRFY_PMODEINVL	Table 52
FSTC_0051	FSTCD_SCLD_WATCHDOGANDIODD	Table 53
FSTC_0052	FSTCD_SCLD_FLOW_NOERRMC1TO	Table 55
FSTC_0053	FSTCD_SCLD_FLOW_SETSD1MC0	Table 56
FSTC_0054	FSTCD_SCLD_FLOW_ SETSD0MC5TO	Table 57
FSTC_0055	FSTCD_SCLD_FLOW_SETSD0MC1TO	Table 58
FSTC_0056	FSTCD_SCLD_FLOW_SETSD1MC0	Table 59
FSTC_0057	FSTCD_SCLD_FLOW_SETSD0MC2TO	Table 60
FSTC_0058	FSTCD_SCLD_FLOW_SETSD0MC1TO	Table 61
FSTC_0059	FSTCD_SCLD_FLOW_SETSD0MC7TO	Table 62
FSTC_0060	FSTCD_SCLD_FLOW_CRC1MC0TO	Table 63
FSTC_0061	FSTCD_SCLD_FLOW_SETSD1MC0TO	Table 64
FSTC_0062	FSTCD_SCLD_FLOW_SETSD1MC0	Table 65
FSTC_0063	FSTCD_SCLD_FLOW_SETSD1MC0DCE1	Table 66
FSTC_0064	FSTCD_SCLD_FLOW_SETSD1MC0DCE1	Table 67
FSTC_0065	FSTCD_SCLD_FLOW_SETSD0MC2DCE1	Table 68
FSTC_0066	FSTCD_SCLD_FLOW_SETSD1MC0DCE1	Table 69
FSTC_0067	FSTCD_SCLD_FLOW_SETSD1MC0DCE1	Table 70
FSTC_0068	FSTCD_SCLD_FLOW_PNERRMC0	Table 71
FSTC_0069	FSTCD_SCLD_FLOW_SETSD0MC2TO	Table 72
FSTC_0070	FSTCD_SCLD_FLOW_SETSD1MC0DCE1	Table 73
FSTC_0071	FSTCD_SCLD_FLOW_SETSD1MC0DCE1	Table 74
FSTC_0072	FSTCD_SCLD_FLOW_SETSD1MC0DCE1	Table 75
FSTC_0073	FSTCD_SCLD_FLOW_SETSD1MC0DCE1	Table 76
FSTC_0074	FSTCD_SCLD_FLOW_SETSD1MC1DCE1	Table 77
FSTC_0075	FSTCD_SCLD_FLOW_SETSD1MC1DCE1	Table 78
FSTC_0076	FSTCD_SCLD_FLOW_SETSD0MC1TO	Table 79
FSTC_0077	FSTCD_SCLD_FLOW_SETSD0MC1TO	Table 80
FSTC_0078	FSTCD_SCLD_FLOW_SETSD0MC1TO	Table 81
FSTC_0079	FSTCD_SCLD_FLOW_SETSD0MC2TO	Table 82
FSTC_0080	FSTCD_SCLD_FLOW_SETSD0MC2TO	Table 83
FSTC_0081	FSTCD_SCLD_FLOW_SETSD0MC2TO	Table 84

FSTC_0082	FSTCD_SCLD_FLOW_SETSD0MC3TO	Table 85
FSTC_0083	FSTCD_SCLD_FLOW_SETSD0MC3TO	Table 86
FSTC_0084	FSTCD_SCLD_FLOW_SETSD0MC3TO	Table 87
FSTC_0085	FSTCD_SCLD_FLOW_SETSD0MC4TO	Table 88
FSTC_0086	FSTCD_SCLD_FLOW_SETSD0MC4TO	Table 89
FSTC_0087	FSTCD_SCLD_FLOW_SETSD0MC4TO	Table 90
FSTC_0088	FSTCD_SCLD_FLOW_SETSD0MC5TO	Table 91
FSTC_0089	FSTCD_SCLD_FLOW_SETSD0MC5TO	Table 92
FSTC_0090	FSTCD_SCLD_FLOW_SETSD0MC5TO	Table 93
FSTC_0091	FSTCD_SCLD_FLOW_SETSD0MC6TO	Table 94
FSTC_0092	FSTCD_SCLD_FLOW_SETSD0MC6TO	Table 95
FSTC_0093	FSTCD_SCLD_FLOW_SETSD0MC7TO	Table 96
FSTC_0094	FSTCD_SCLD_FLOW_SETSD0MC7TO	Table 97
FSTC_0095	FSTCD_SCLD_FLOW_SETSD0MC7TO	Table 98
FSTC_0096	FSTCD_SCLD_FLOW_SETSD1MC0DCE1	Table 99
FSTC_0097	FSTCD_SCLD_FLOW_SETSD1MC0DCE1	Table 100
FSTC_0098	FSTCD_SCLD_FLOW_SETSD1MC0DCE1	Table 101
FSTC_0099	FSTCD_SCLD_FLOW_SETSD1MC0DCE1	Table 102
FSTC_0100	FSTCD_SCLD_FLOW_SETSD1MC0DCE1	Table 103
FSTC_0101	FSTCD_SCLD_FLOW_SETSD0MC2TO	Table 104
FSTC_0102	FSTCD_SCLD_FLOW_SETSD0MC2DCE1	Table 105
FSTC_0103	FSTCD_SCLD_FLOW_SETSD0MC3TO	Table 106
FSTC_0104	FSTCD_SCLD_FLOW_SETSD0MC3TO	Table 107
FSTC_0105	FSTCD_SCLD_FLOW_SETSD0MC4TO	Table 108
FSTC_0106	FSTCD_SCLD_FLOW_SETSD1MC0DCE1	Table 109
FSTC_0107	FSTCD_SCLD_FLOW_SETSD1MC0	Table 110
FSTC_0108	FSTCD_SCLD_FLOW_SETSD1MC0DCE1	Table 111
FSTC_0109	FSTCD_SCLD_FLOW_SETSD1MC0DCE1	Table 112
FSTC_0110	FSTCD_SCLD_FLOW_SETSD1MC0DCE1	Table 113
FSTC_0111	FSTCD_SCLD_FLOW_SETSD1MC0DCE1	Table 114
FSTC_0112	FSTCD_SCLD_FLOW_SETSD1MC0	Table 115
FSTC_0113	FSTCD_SCLD_FLOW_SETSD1MC0DCE1	Table 116
FSTC_0114	FSTCD_SCLD_FLOW_SETSD1MC0DCE1	Table 117
FSTC_0115	FSTCD_SCLD_FLOW_SETSD1MC0DCE1	Table 118
FSTC_0116	FSTCD_SCLD_FLOW_SETSD1MC0	Table 119
FSTC_0117	FSTCD_SCLD_FLOW_SETSD1MC0	Table 120
FSTC_0118	FSTCD_SCLD_FLOW_SETSD1MC0DCE1	Table 121
FSTC_0119	FSTCD_SCLD_FLOW_SETSD1MC0	Table 122
FSTC_0120	FSTCD_SCLD_FLOW_SETSD1MC0DCE1	Table 123
FSTC_0121	FSTCD_SCLD_FLOW_SETSD1MC0DCE1	Table 124
FSTC_0122	FSTCD_SCLD_FLOW_SETSD1MC0DCE1	Table 125
FSTC_0123	FSTCD_SCLD_FLOW_SETSD1MC0DCE1	Table 126
FSTC_0124	FSTCD_SCLD_FLOW_SETSD1MC0DCE1	Table 127
FSTC_0125	FSTCD_SCLD_FLOW_SETSD1MC0DCE1	Table 128
FSTC_0126	FSTCD_SCLD_FLOW_SETSD1MC0DCE1	Table 129

FSTC_0127	FSTCD_SCLD_FLOW_SETSD1MC0	Table 130
FSTC_0128	FSTCD_SCLD_FLOW_SETSD1MC0DCE1	Table 131
FSTC_0129	FSTCD_SCLD_FLOW_SETSD1MC0DCE1	Table 132
FSTC_0130	FSTCD_SCLD_FLOW_SETSD1MC0DCE1	Table 133
FSTC_0131	FSTCD_SCLD_FLOW_SETSD1MC0DCE1	Table 134
FSTC_0132	FSTCD_SCLD_FLOW_SETSD0MC1TO	Table 135
FSTC_0133	FSTCD_SCLD_FLOW_SETSD0MC1TO	Table 136
FSTC_0134	FSTCD_SCLD_FLOW_SETSD0MC1TO	Table 137
FSTC_0135	FSTCD_SCLD_FLOW_SETSD0MC2TO	Table 138
FSTC_0136	FSTCD_SCLD_FLOW_SETSD0MC2TO	Table 139
FSTC_0137	FSTCD_SCLD_FLOW_SETSD0MC2TO	Table 140
FSTC_0138	FSTCD_SCLD_FLOW_SETSD0MC3TO	Table 141
FSTC_0139	FSTCD_SCLD_FLOW_SETSD0MC3TO	Table 142
FSTC_0140	FSTCD_SCLD_FLOW_SETSD1MC0DCE1	Table 143
FSTC_0141	FSTCD_SCLD_FLOW_SETSD0MC2TO	Table 144
FSTC_0142	FSTCD_SCLD_FLOW_SETSD0MC1TO	Table 145
FSTC_0143	FSTCD_SCLD_FLOW_SETSD0MC1TO	Table 146
FSTC_0144	FSTCD_SCLD_FLOW_SETSD0MC3	Table 147
FSTC_0145	FSTCD_SCLD_FLOW_SETSD0MC1TO	Table 148
FSTC_0146	FSTCD_SCLD_FLOW_SETSD0MC3TO	Table 149
FSTC_0147	FSTCD_SCLD_FLOW_SETSD0MC2TO	Table 150
FSTC_0148	FSTCD_REFT_INVOKEDEDITOOL	Table 151
FSTC_0149	FSTCD_REFT_CALCDEDITOOL	Table 152
FSTC_0150	FSTCD_REFT_BACKDEDITOOL	Table 153
FSTC_0151	FSTCD_REFT_COMMDEDITOOL	Table 154
FSTC_0152	FSTCD_REFT_CORRECTFSTVALUES	Table 155
FSTC_0153	FSTCD_REFT_INCORRECTFSPVALUES	Table 156
FSTC_0154	FSTCD_REFT_COMMINTERRUPT	Table 158
FSTC_0155	FSTCM_INFO_DOCUMENTS	Table 160
FSTC_0156	FSTCM_CONF_INFO_CONNECTCABLE	Table 161
FSTC_0157	FSTCM_CONF_INFO_DEFAULTPARAM	Table 162
FSTC_0158	FSTCM_INFO_FSMIDENT	Table 163
FSTC_0159	FSTCM_INFO_FSMAUTHENT	Table 164
FSTC_0160	FSTCM_FSOP_PORTPOWOFFON	Removed
FSTC_0161	FSTCM_FSOP_PREOPVERIFY	Table 165
FSTC_0162	FSTCM_FSOP_PREOPMISSCONNECT	Table 166
FSTC_0163	FSTCM_FSOP_PREOPREPLACE	Table 167
FSTC_0164	FSTCM_SCLM_FLOW_SETSD1MC0DCE1	Table 173
FSTC_0165	FSTCM_SCLM_FLOW_SETSD1MC0SDSET1	Table 174
FSTC_0166	FSTCM_SCLM_FLOW_SETSD1MC0CFAC1	Table 175
FSTC_0167	FSTCM_SCLM_FLOW_SETSD1MC0DCE1	Table 176
FSTC_0168	FSTCM_SCLM_FLOW_SETSD1MC0DCE1	Table 177
FSTC_0169	FSTCM_SCLM_FLOW_SETSD1MC0DCE1	Table 178
FSTC_0170	FSTCM_SCLM_FLOW_SETSD1MC0DCE1	Table 179
FSTC_0171	FSTCM_SCLM_FLOW_SETSD1MC0DCE1PNERR	Table 180

FSTC_0172	FSTCM_SCLM_FLOW_SETSD1MC0	Table 181
FSTC_0173	FSTCM_SCLM_FLOW_PNERRCRCERR	Table 182
FSTC_0174	FSTCM_SCLM_FLOW_PNERRCRCERR	Table 183
FSTC_0175	FSTCM_SCLM_FLOW_PNERRMC0	Table 184
FSTC_0176	FSTCM_SCLM_FLOW_CRCERRMC0	Table 185
FSTC_0177	FSTCM_FSOP_SPLITTERMIXPD32	Table 186
FSTC_0178	FSTCM_FSOP_SPLITTERSAFEPD32	Removed
FSTC_0179	FSTCM_FSOP_SPLITTERMIXPD16	Removed
FSTC_0180	FSTCM_FSOP_SPLITTERSAFEPD16	Removed
FSTC_0181	FSTCM_FSOP_COMPOSERMIXPD32	Table 187
FSTC_0182	FSTCM_FSOP_COMPOSERSAFEPD32	Removed
FSTC_0183	FSTCM_FSOP_COMPOSERMIXPD16	Removed
FSTC_0184	FSTCM_FSOP_COMPOSERSAFEPD16	Removed
FSTC_0185	FSTCM_SMIS_READBACKCONFIG	Table 188
FSTC_0186	FSTCM_SMIS_FSPORTSTATUS	Table 189
FSTC_0187	FSTCM_REFD_PORTEVENT_TIMEOUT	Table 191
FSTC_0188	FSTCM_REFD_FSDEVICEEVENTCORRECT	Table 196
FSTC_0189	FSTCM_SCLM_WATCHDOGPRECISION	Table 198
FSTC_0190	FSTCM_TOOL_IODDIMPORT	Table 200
FSTC_0191	FSTCM_TOOL_IODDCONVENTIONS	Table 201
FSTC_0192	FSTCM_TOOL_IODDDISPLAYCOMPLETE	Table 202
FSTC_0193	FSTCM_TOOL_FSTPARAMETERS	Table 203
FSTC_0194	FSTCM_TOOL_COMMDEDITOOL	Table 204
FSTC_0195	FSTCM_TOOL_DDOEXCHANGE	Removed
FSTC_0196	FSTCM_DLMH_READY	Table 168
FSTC_0197	FSTCM_DLMH_READY_REPEAT	Table 169
FSTC_0198	FSTCD_REFT_RM	Table 159
FSTC_0199	FSTCM_REFT_RD	Table 199
FSTC_0200	FSTCD_PHYL_INTF_READYNESS	Table 17
FSTC_0201	FSTCM_REFD_PORTEVENT_CRC	Table 192
FSTC_0202	FSTCM_REFD_PORTEVENT_COUNTER	Table 193
FSTC_0203	FSTCM_REFD_PORTEVENT_VERIFY_RECORD	Table 194
FSTC_0204	FSTCM_REFD_PORTEVENT_CONFIG_ERROR	Table 195
FSTC_0205	FSTCM_SMIS_TECHPARCRC_VOLATILE	Table 190
FSTC_0206	FSTCM_DLMH_READY_WAIT	Table 171
FSTC_0207	FSTCD_CONF_FSPRO	Table 30
FSTC_0208	FSTCM_FSOP_PORTIDENTITY	Table 171

Bibliography

[1] IEC 61131-9:2022, *Programmable controllers – Part 9: Single-drop digital communication interface for small sensors and actuators (SDCI)*, www.iec.ch

[2] IO-Link Community, *IO-Link Interface and System*, V1.1.5, Order No. 10.002

[3] IO-Link Community, *IO-Link Safety System Extensions*, V1.1.5 Order No. 10.092

[4] IO-Link Community, *IO Device Description (IODD)*, V1.1.5, Order No. 10.012

[5] IO-Link Community, *Common Profile*, V 1.2.1, Order No. 10.072

[6] ISO/IEC 19505-2:2012, *Information technology – OMG Unified Modeling Language (OMG UML)*, Revision 2

[7] ZVEI-Recommendation https://www.zvei.org/fileadmin/user_upload/Presse_und_Medien/Publikationen/2021/Juni/ZVEI_Empfehlung_Klassifizierung_Binaerer_24-V-Schnittstellen/24V-Schnittstellen_final.pdf

[8] IO-Link Community, *IO-Link Test*, V1.1.5, 2025, Order No. 10.032

[9] IO-Link Community, *IO-Link Exceptions*, V1.0, January 2020, Order No. 10.232

[10] PI Profile Specification, *IO-Link Safety Integration in PROFIsafe*, Order No. 3.312

_____

IO-Link Community
Ohiostraße 8
76149 Karlsruhe
Germany
Phone: +49 (0) 721 / 98 61 97 0
Fax: +49 (0) 721 / 98 61 97 11
e-mail: info@io-link.com
http://www.io-link.com/

IO-Link